JVC

SERVICE MANUAL

CD RECEIVER

KD-S7R

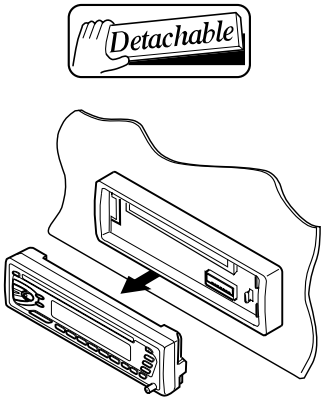

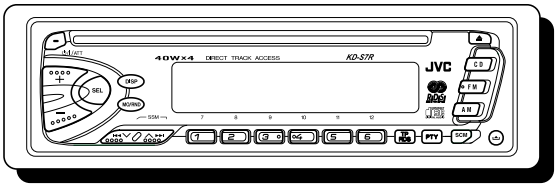

COMPACT disc DIGITAL AUDIO

RDS EON

Area Suffix

E ---- Continental Europe
EX---------Central Europe

Contents

Safety precaution ---------- 1-2
Preventing static electricity ---------- 1-3
Important for laser products ---------- 1-4
Location of main parts ---------- 1-5
Disassembly method ---------- 1-6
Adjustment method ---------- 1-11
Flow of functional operation unit TOC read ---------- 1-12
Maintenance of laser pickup ---------- 1-14
Replacement of laser pickup ---------- 1-14
Description of major ICs ---------- 1-15

COPYRIGHT © 2001 VICTOR COMPANY OF JAPAN, LTD.

No.49611
Feb. 2001

Safety precaution

⚠ ***CAUTION*** **Burrs formed during molding may be left over on some parts of the chassis. Therefore, pay attention to such burrs in the case of preforming repair of this system.**

⚠ ***CAUTION*** **Please use enough caution not to see the beam directly or touch it in case of an adjustment or operation check.**

Preventing static electricity

Electrostatic discharge (ESD), which occurs when static electricity stored in the body, fabric, etc. is discharged, can destroy the laser diode in the traverse unit (optical pickup). Take care to prevent this when performing repairs.

1.1. Grounding to prevent damage by static electricity

Static electricity in the work area can destroy the optical pickup (laser diode) in devices such as DVD players. Be careful to use proper grounding in the area where repairs are being performed.

1.1.1. Ground the workbench

1. Ground the workbench by laying conductive material (such as a conductive sheet) or an iron plate over it before placing the traverse unit (optical pickup) on it.

1.1.2. Ground yourself

1. Use an anti-static wrist strap to release any static electricity built up in your body.

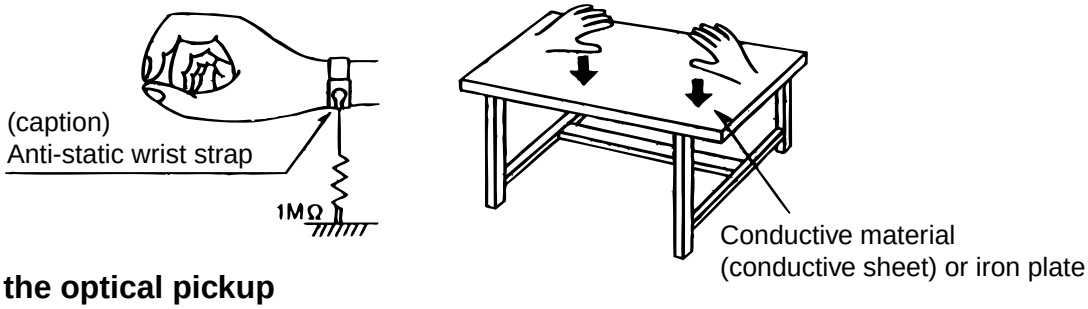

1.1.3. Handling the optical pickup

1. In order to maintain quality during transport and before installation, both sides of the laser diode on the replacement optical pickup are shorted. After replacement, return the shorted parts to their original condition. (Refer to the text.)

2. Do not use a tester to check the condition of the laser diode in the optical pickup. The tester's internal power source can easily destroy the laser diode.

1.2. Handling the traverse unit (optical pickup)

1. Do not subject the traverse unit (optical pickup) to strong shocks, as it is a sensitive, complex unit.

2. Cut off the shorted part of the flexible cable using nippers, etc. after replacing the optical pickup. For specific details, refer to the replacement procedure in the text. Remove the anti-static pin when replacing the traverse unit. Be careful not to take too long a time when attaching it to the connector.

3. Handle the flexible cable carefully as it may break when subjected to strong force.

4. It is not possible to adjust the semi-fixed resistor that adjusts the laser power. Do not turn it

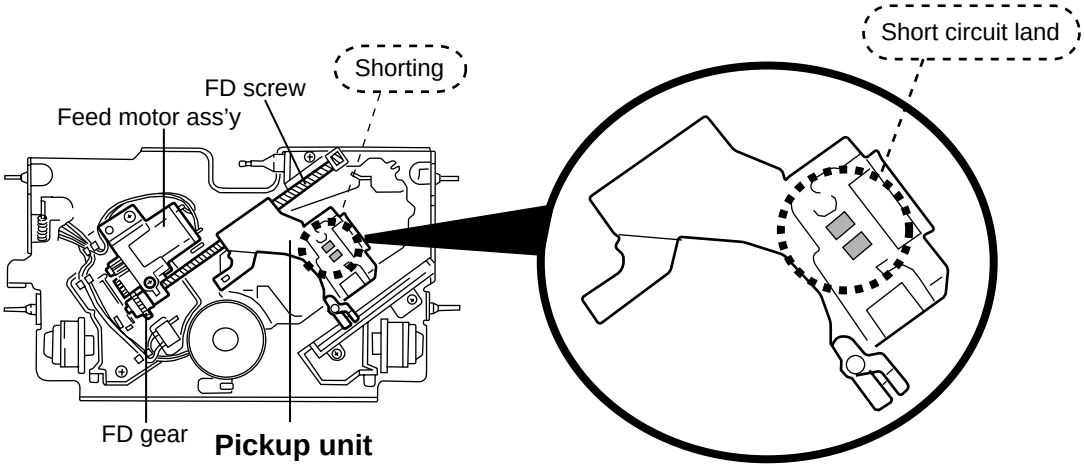

Important for laser products

1.CLASS 1 LASER PRODUCT

2.DANGER : Invisible laser radiation when open and inter lock failed or defeated. Avoid direct exposure to beam.

3.CAUTION : There are no serviceable parts inside the Laser Unit. Do not disassemble the Laser Unit. Replace the complete Laser Unit if it malfunctions.

4.CAUTION : The compact disc player uses invisible laserradiation and is equipped with safety switches whichprevent emission of radiation when the drawer is open and the safety interlocks have failed or are de feated. It is dangerous to defeat the safety switches.

5.CAUTION : If safety switches malfunction, the laser is able to function.

6.CAUTION : Use of controls, adjustments or performance of procedures other than those specified herein may result in hazardous radiation exposure.

⚠ ***CAUTION*** **Please use enough caution not to see the beam directly or touch it in case of an adjustment or operation check.**

VARNING : Osynlig laserstrålning är denna del är öppnad och spårren är urkopplad. Betrakta ej strålen.

VARO : Avattaessa ja suojalukitus ohitettaessa olet alttiina näkymättömälle lasersäteilylle.Älä katso säteeseen.

ADVARSEL : Usynlig laserstråling ved åbning , når sikkerhedsafbrydere er ude af funktion. Undgå udsættelse for stråling.

ADVARSEL : Usynlig laserstråling ved åpning,når sikkerhetsbryteren er avslott. unngå utsettelse for stråling.

REPRODUCTION AND POSITION OF LABELS

WARNING LABEL

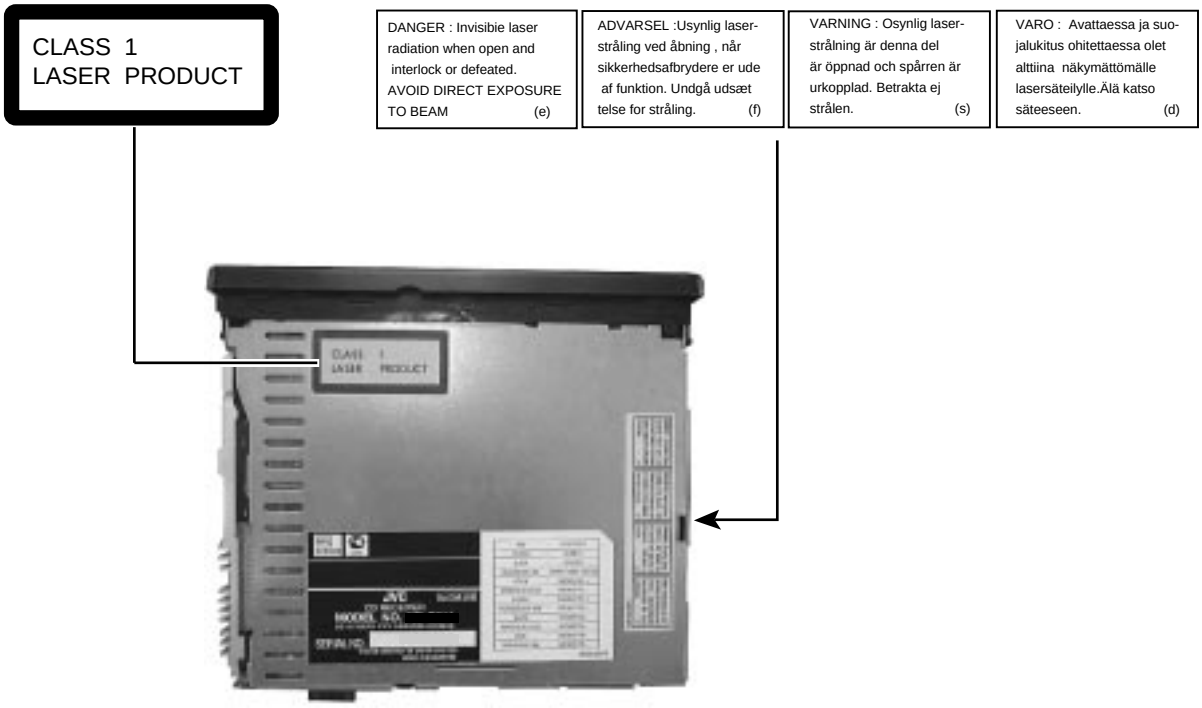

Location of main parts

■ Control unit

■ Main unit

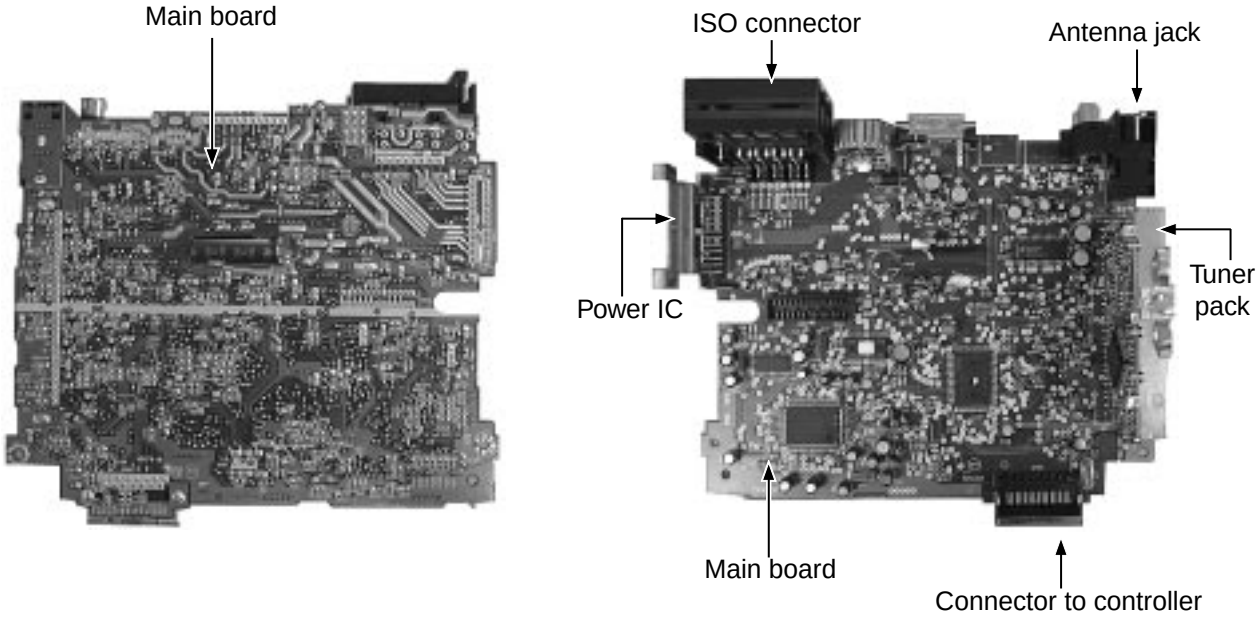

■ CD mechanism

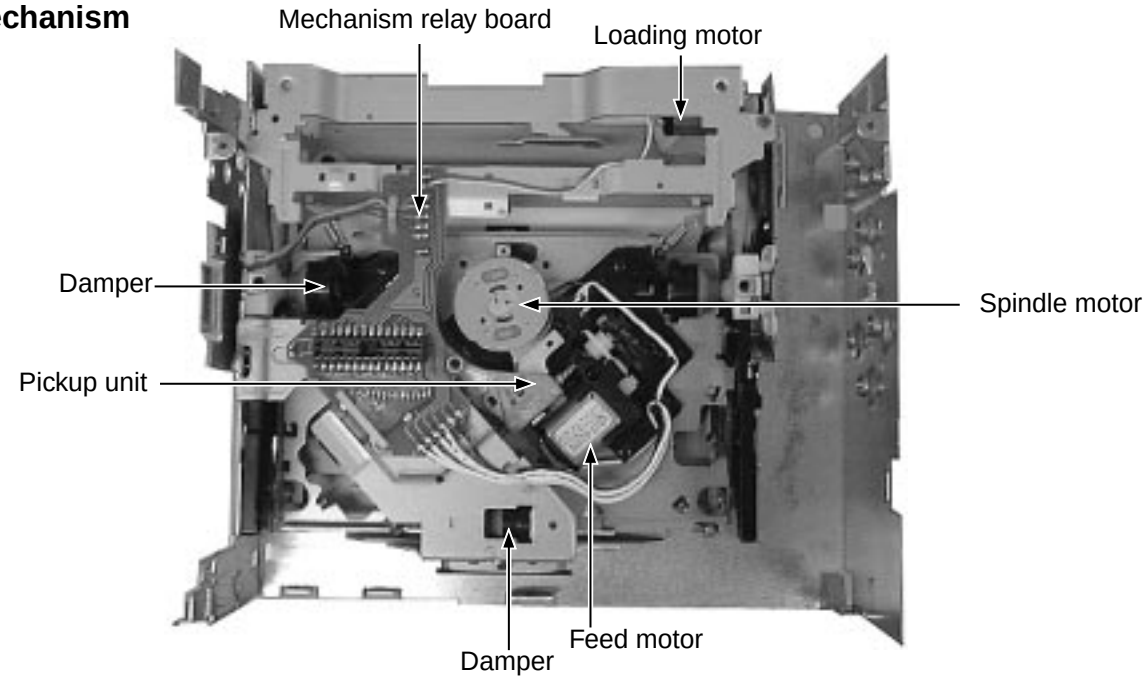

Disassembly method

■ Removing the front panel unit (See Fig.1)

1. Press the release button and remove the front panel unit in the direction of the arrow.

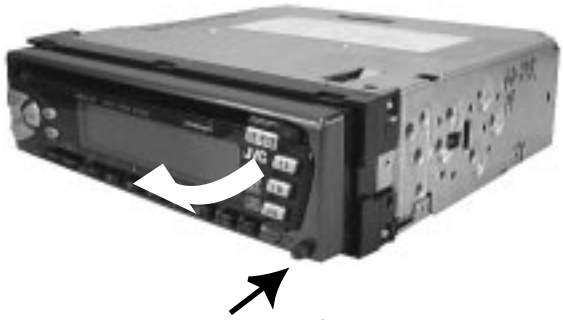

Fig.1

■ Removing the front chassis (See Fig.2)

1. Insert a screwdriver to the joints a on the side of the front chassis and two joints b on the right side, then detach the front chassis toward the front side.

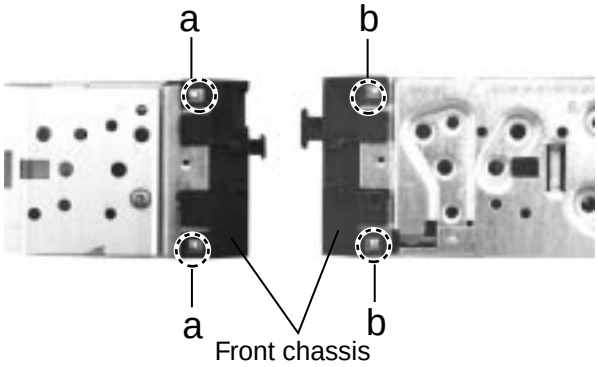

Fig.2

■ Removing the heat sink (See Fig.3)

1. Remove the three screws A attaching the heat sink on the left side of the body, and remove the heat sink.

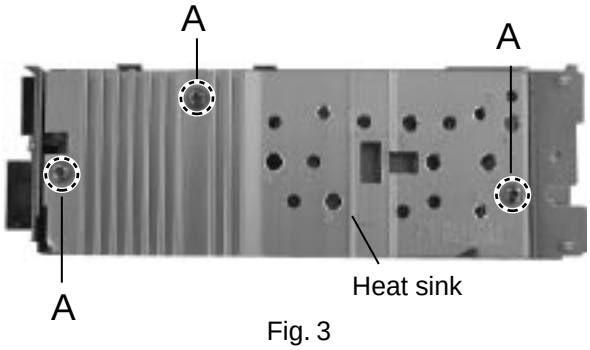

Fig. 3

■ Removing the bottom cover (See Fig.4)

1. Turn the body upside down.

2. Insert a screwdriver to the two joints c and two joints d on both sides of the body and the joint e on the back of the body, then detach the bottom cover from the body.

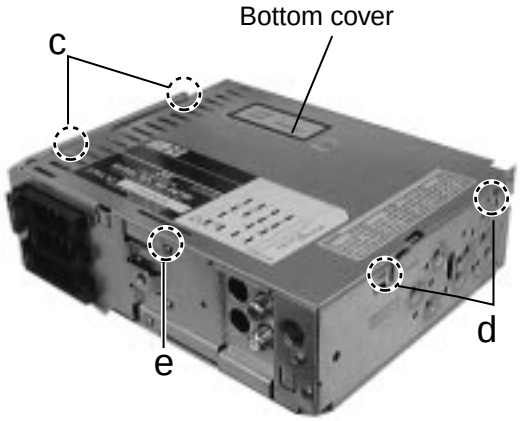

Fig. 4

■ Removing the main amplifier board (See Fig.5 and 6)

1. Remove the front chassis.
2. Remove the bottom cover.
3. Remove the two screws B attaching the main amplifier board assembly on the bottom of the body.
4. Remove the three screws C attaching the main amplifier board assembly on the back of the body.
5. Disconnect connector CN501 on the main amplifier board assembly from the CD mechanism assembly.

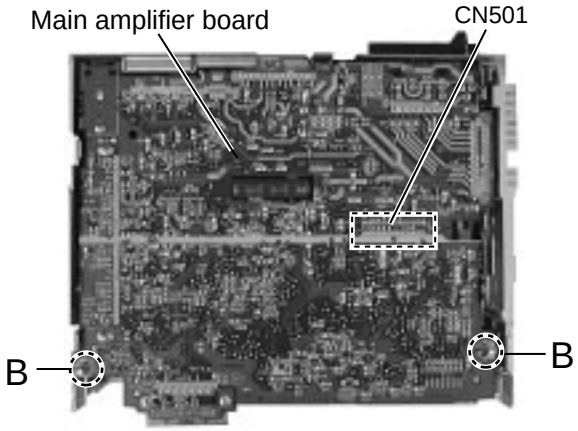

Fig.5

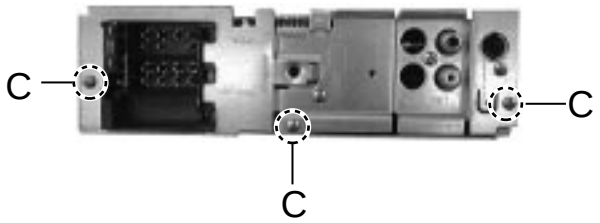

Fig. 6

■ Removing the CD mechanism assembly (See Fig.7)

1. Remove the front chassis.
2. Remove the bottom cover.
3. Remove the main amplifier board assembly.
4. Remove the three screws D attaching the CD mechanism assembly from the top cover.

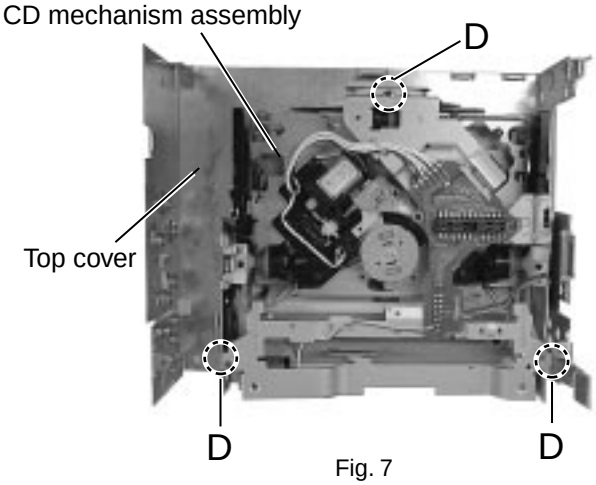

Fig. 7

■ Removing the control switch board (See Fig.8 and 9)

1. Remove the front chassis.
2. Remove the four screws E attaching the rear cover on the back of the front panel unit.
3. Remove the control switch board from the front panel unit.

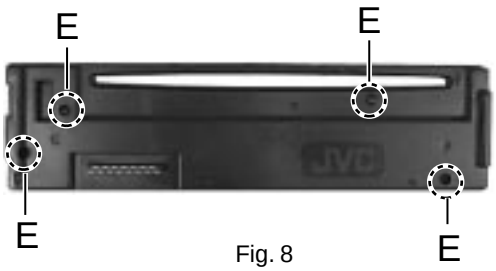

Fig. 8

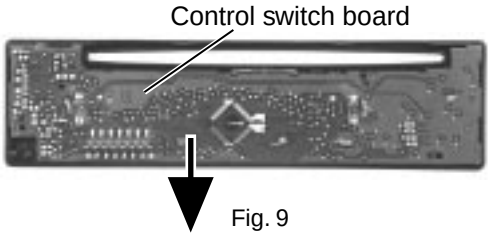

Fig. 9

<CD mechanism section>

- Prior to disassembling the CD mechanism, remove the following parts.
- The front panel unit and the front chassis (Refer to Fig.1 and 2)
- The heat sink (Refer to Fig.3)
- The bottom cover (Refer to Fig.4)
- The main amplifier board (Refer to Fig.5 and 6)
- The CD mechanism assembly (Refer to Fig.7)

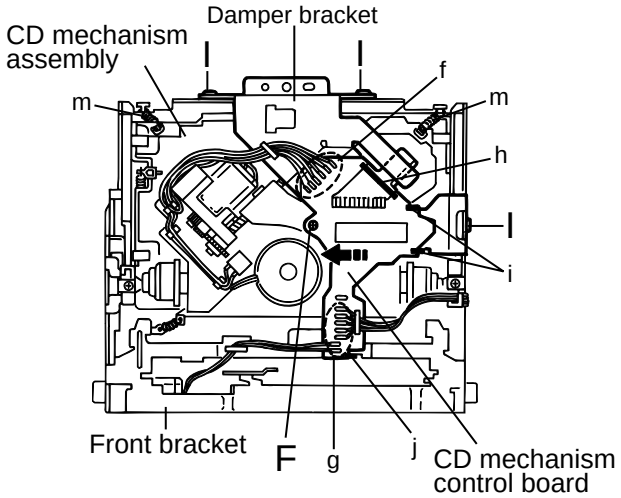

Fig.10

■Removing the CD mechanism control board(See Fig.10 and 11)

1. Unsolder the part f and g on the CD mechanism control board.
2. Remove the stator fixing the CD mechanism control board and the damper bracket (To remove the stator smoothly, pick up the center part).

   Remove the screw F attaching the CD mechanism control board.

   Remove the CD mechanism control board in the direction of the arrow while releasing it from the two damper bracket slots i and the front bracket slot j.

   Disconnect the flexible wire from connector on the pickup unit.

   ATTENTION: Turn the FD gear in the direction of the arrow to move the entire pickup unit to the appropriate position where the flexible wire of the CD mechanism unit can be disconnected easily (Refer to Fig.11).

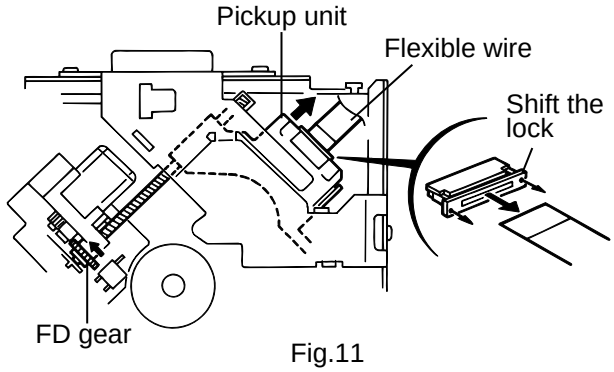

Fig.11

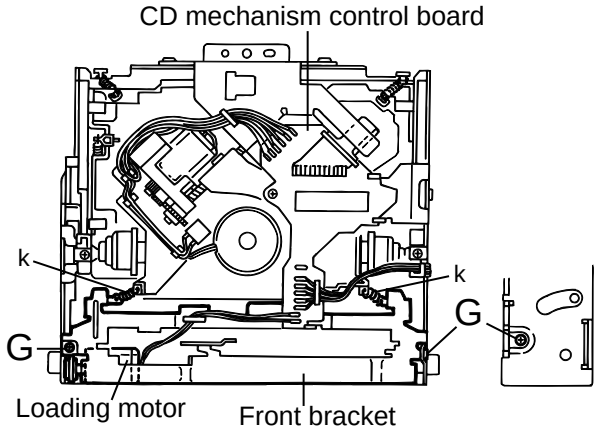

Fig.12

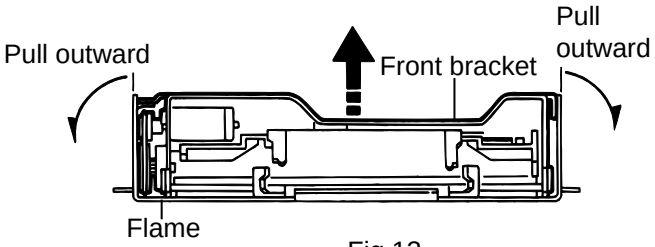

Fig.13

■Removing the loading motor (See Fig.12 to 14)

* Prior to performing the following procedure, remove the CD mechanism control board.

1. Remove the two springs k attaching the CD mechanism ass'y and the front bracket.
2. Remove the two screws G and the front bracket while pulling the flame outward.
3. Remove the belt and the screw H from the loading motor.

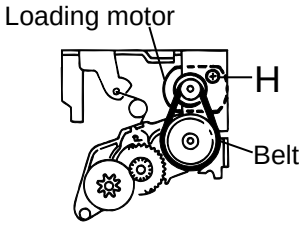

Fig.14

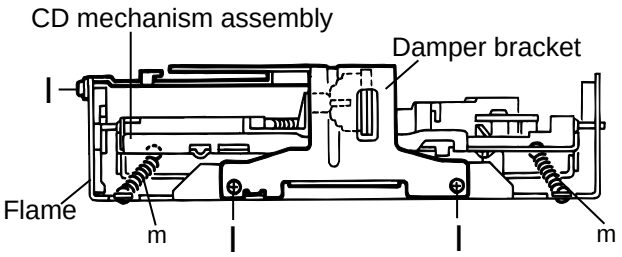

Fig.15

■Removing the CD mechanism ass'y (See Fig.10, 15 to 18)

* Prior to performing the following procedure, remove the CD mechanism control PWB and the front bracket (loading motor).

1. Remove the three screws I and the damper bracket.
2. Raise the both sides fix arms and move the fix plates in the direction of the arrow to place the four shafts I as shown in Fig.17 and 18.
3. Remove the CD mechanism ass'y and the two springs m attaching the flame.
4. Remove the two screws J and both sides rear damper brackets from the dampers. Detach the CD mechanism ass'y from the left side to the right side.

ATTENTION: The CD mechanism ass'y can be removed if only the rear damper bracket on the left side is removed.

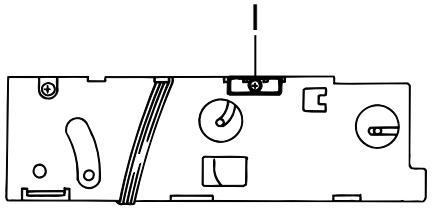

Fig.16

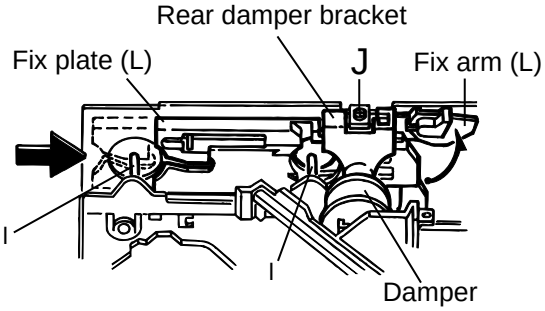

Fig.17

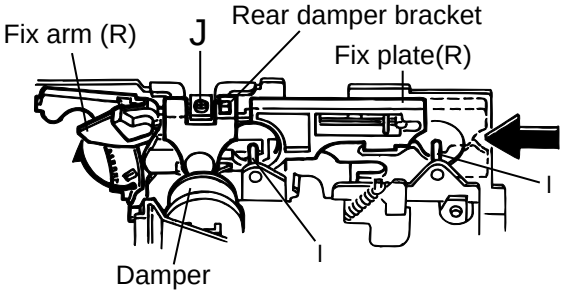

Fig.18

■ Removing the feed motor assembly (See Fig.19)

* Prior to performing the following procedure, remove the CD mechanism control board, the front bracket (loading motor) and the CD mechanism ass'y.

1. Remove the two screws K and the feed motor ass'y.

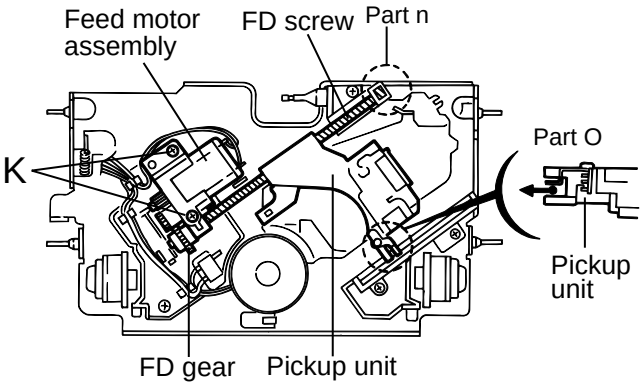

Fig.19

■ Removing the pickup unit (See Fig.19 and 20)

* *Prior to performing the following procedure, remove the CD mechanism control board, the front bracket (loading motor), the CD mechanism ass'y and the feed motor ass'y.

1. Detach the FD gear part of the pickup unit upward. Then remove the pickup unit while pulling out the part n of the FD screw.

   ATTENTION: When reattaching the pickup unit, reattach the part o of the pickup unit, then the part n of the FD screw.

2. Remove the screw L attaching the nut push spring plate and the pickup mount nut from the pickup unit. Pull out the FD screw.

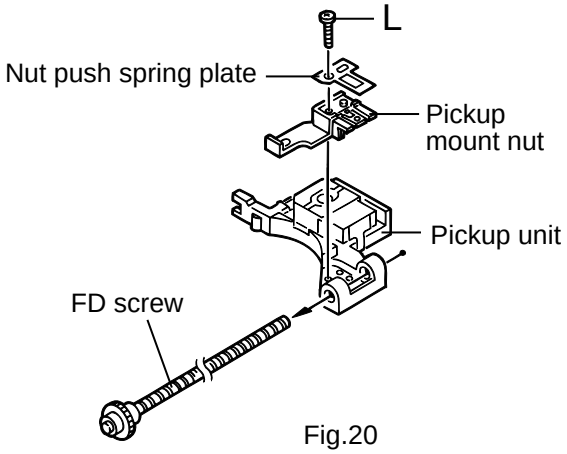

Fig.20

■ Removing the spindle motor (See Fig.21 and 22)

* Prior to performing the following procedure, remove the CD mechanism control board, the front bracket (loading motor), the CD mechanism ass'y and the feed motor ass'y.

1. Turn up the CD mechanism ass'y and remove the two springs p on both sides of the clamper arms. Open the clamper arm upward.

2. Turn the turn table, and remove the two screws M and the spindle motor.

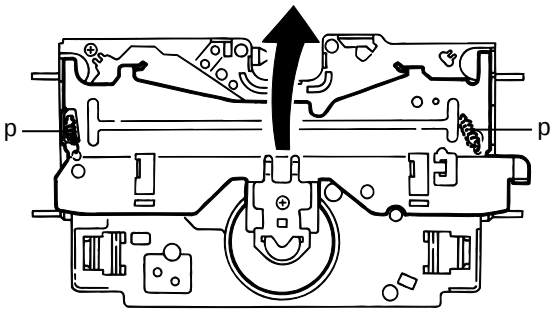

Fig.21

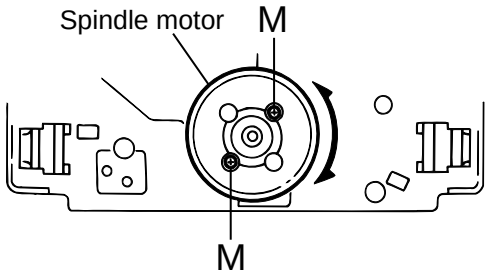

Fig.22

Adjustment method

■ Test instruments required for adjustment
1. Digital oscilloscope (100MHz)
2. AM Standard signal generator
3. FM Standard signal generator
4. Stereo modulator
5. Electric voltmeter
6. Digital tester
7. Tracking offset meter
8. Test Disc JVC :CTS-1000
9. Extension cable for check
EXTGS004-26P×1

■ Standard volume position
Balance and Bass &Treble volume : Indication"0"
Loudness : OFF
BBE : OFF

■ Frequency Band
FM 87.5MHz ~ 108.0MHz
MW 522kHz ~ 1620 kHz
LW 144kHz ~ 279kHz

■ Dummy load
Exclusive dummy load should be used for AM,and FM. For FM dummy load,there is a loss of 6dB between SSG output and antenna input.The loss of 6dB need not be considered since direct reading of figures are applied in this working standard.

■ Standard measuring conditions
Power supply voltage DC14.4V(10.5~16V)
Load impedance 4Ω (4Ωto 8Ω allowance)
Output Level Line out 2.0V / 20 kΩ(Vol. MAX)

■ How to connect the extension cable for adjusting

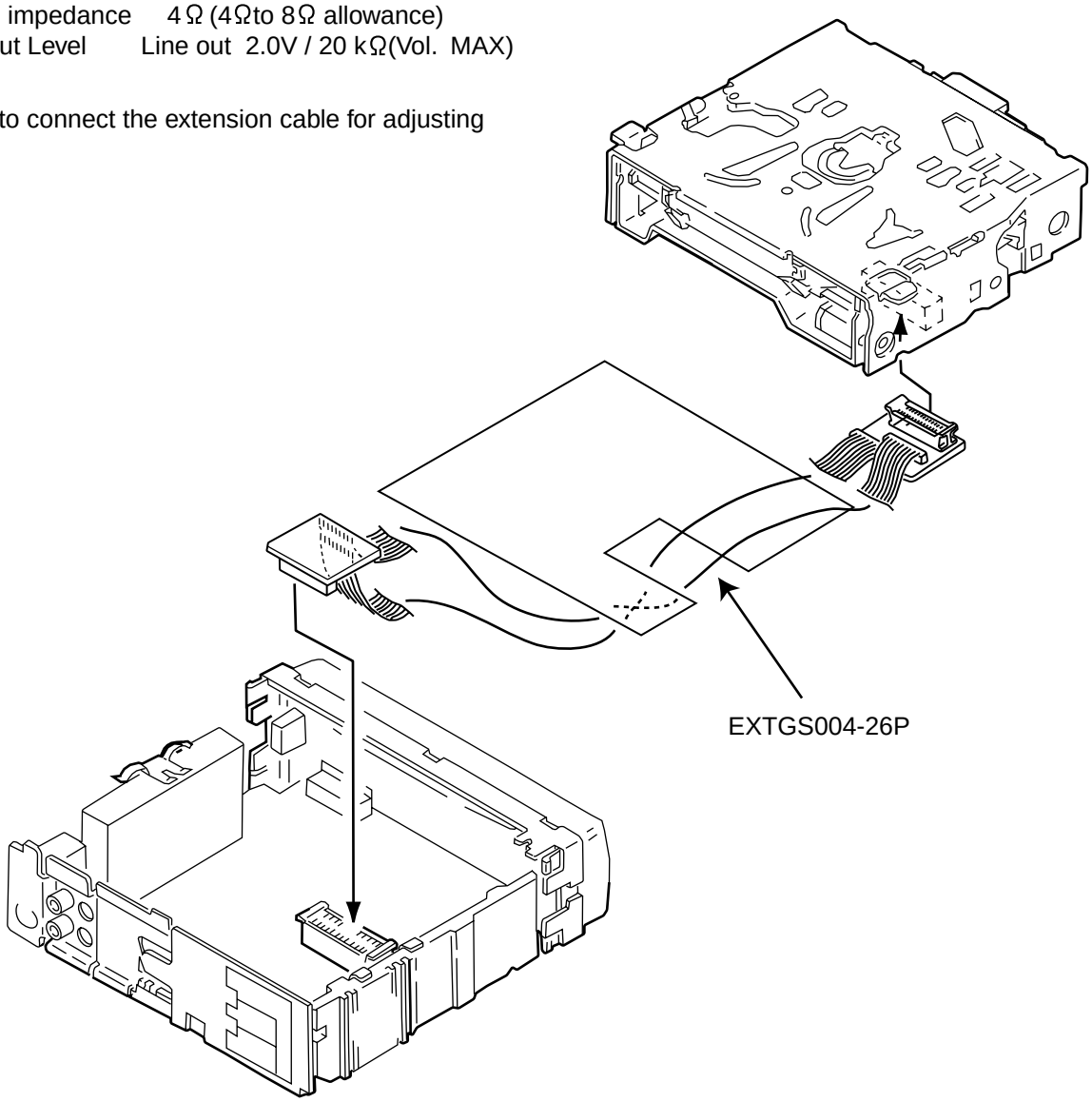

Flow of functional operation until TOC read

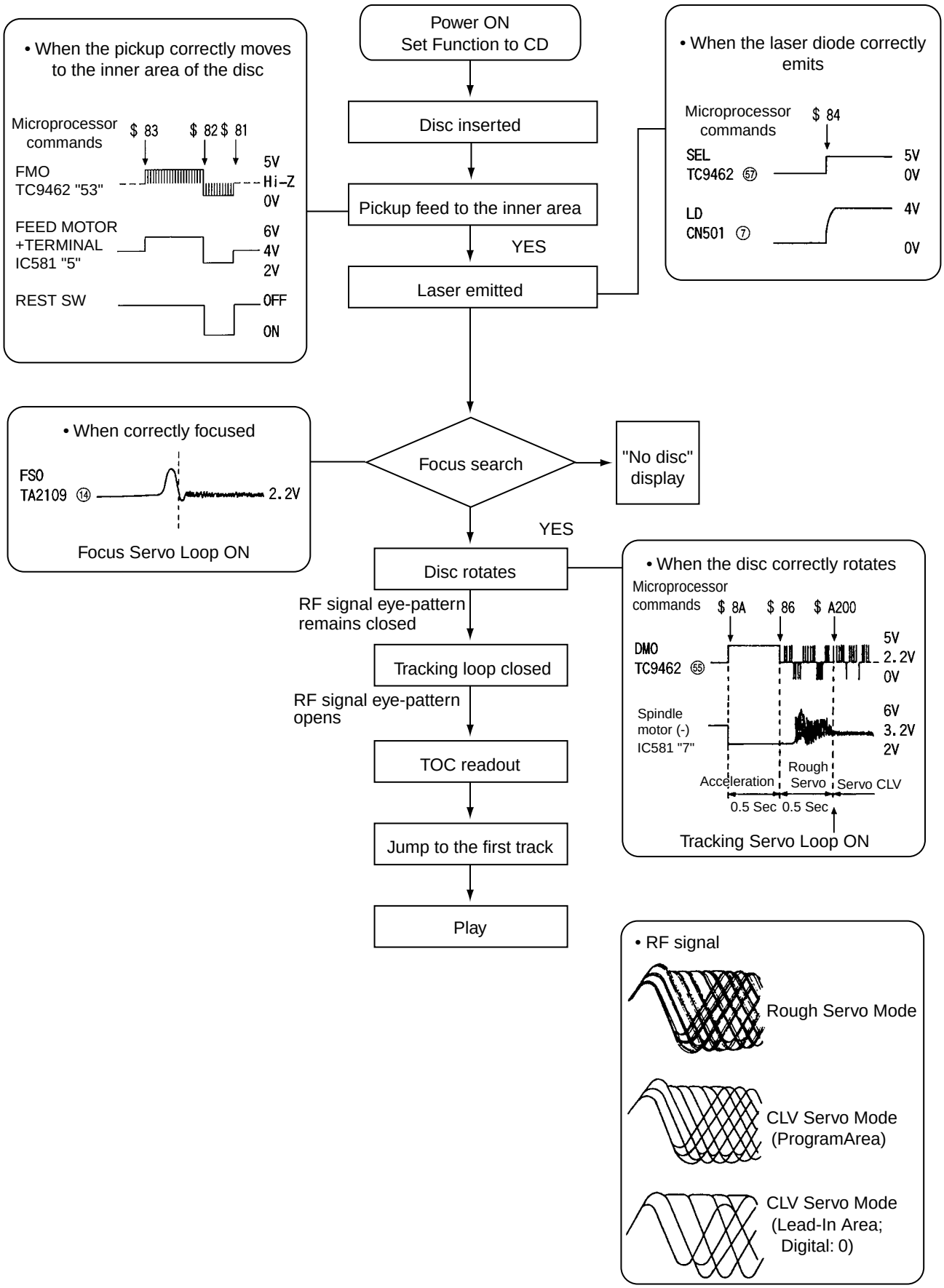

■Feed Section

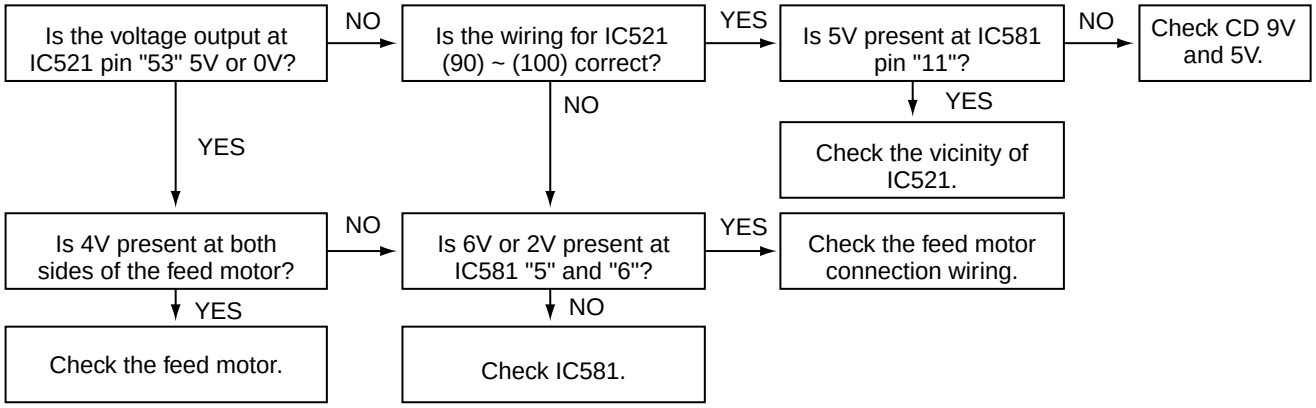

■Focus Section

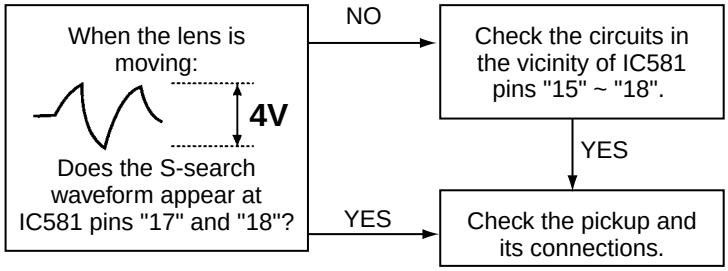

■Spindle Section

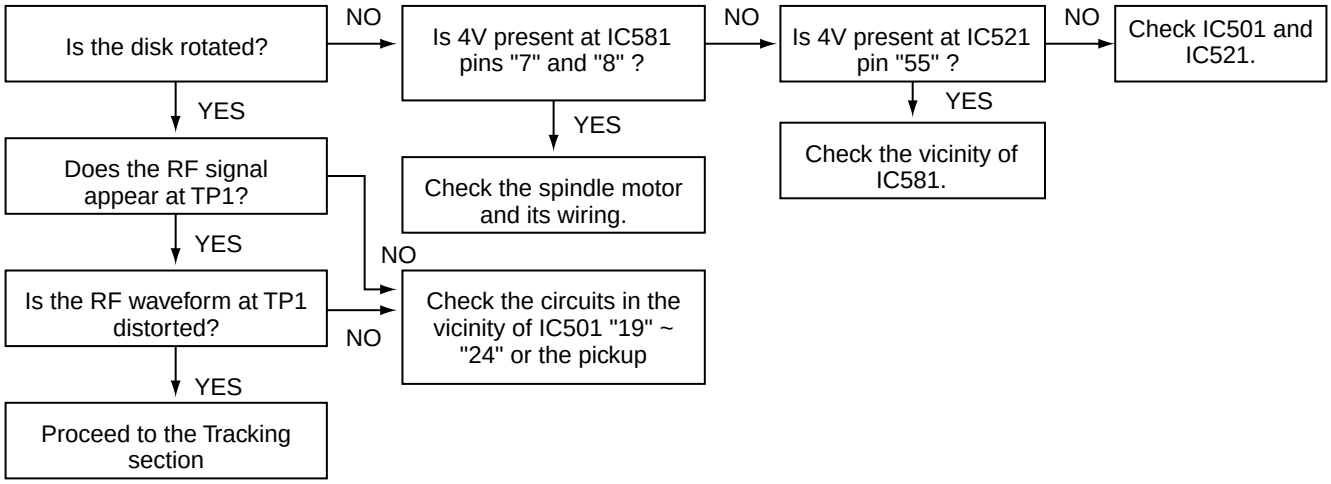

■Tracking Section

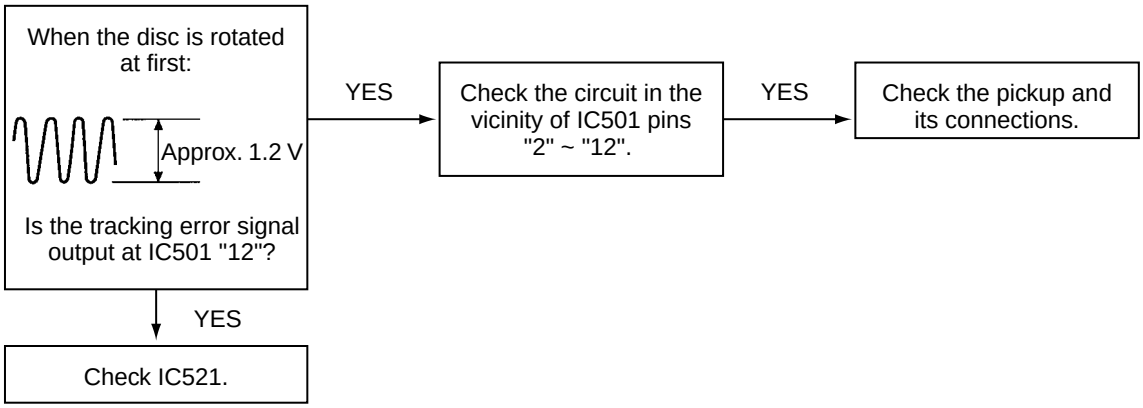

Maintenance of laser pickup

(1) Cleaning the pick up lens
Before you replace the pick up, please try to clean the lens with a alcohol soaked cotton swab.

(2) Life of the laser diode
When the life of the laser diode has expired, the following symptoms will appear.
(1) The level of RF output (EFM output:amplitude of eye pattern) will be low.

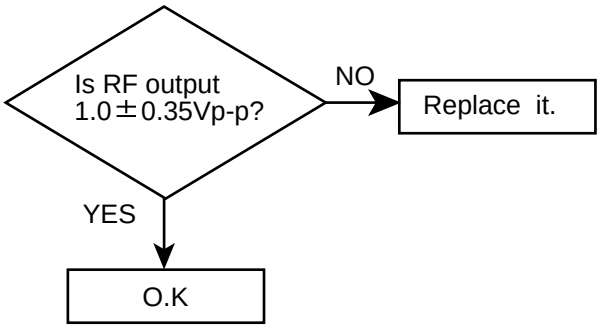

(3) Semi-fixed resistor on the APC PC board
The semi-fixed resistor on the APC printed circuit board which is attached to the pickup is used to adjust the laser power.Since this adjustment should be performed to match the characteristics of the whole optical block, do not touch the semi-fixed resistor.
If the laser power is lower than the specified value,the laser diode is almost worn out, and the laser pickup should be replaced.
If the semi-fixed resistor is adjusted while the pickup is functioning normally,the laser pickup may be damaged due to excessive current.

Replacement of laser pickup

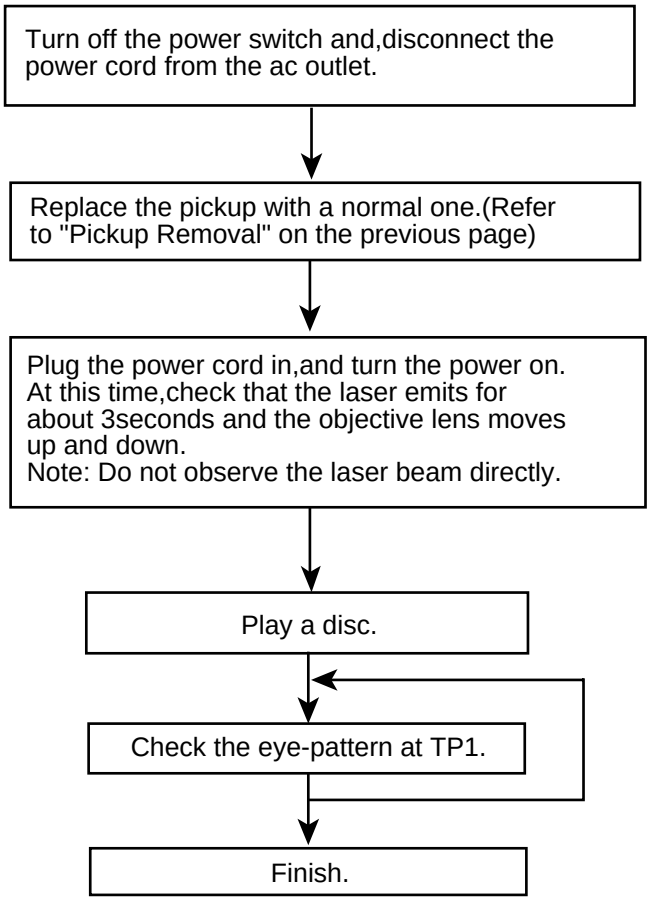

Description of major ICs

■ TEA6320T-X (IC161) : E.volume

1.Pin Layout

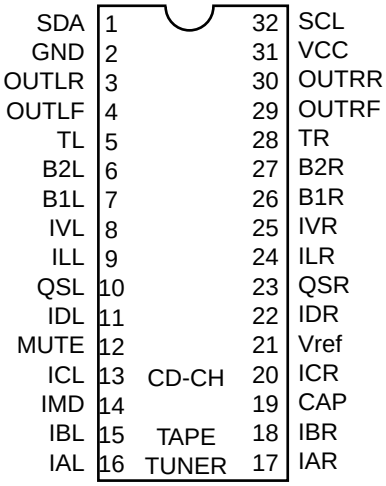

2.Block Diagram

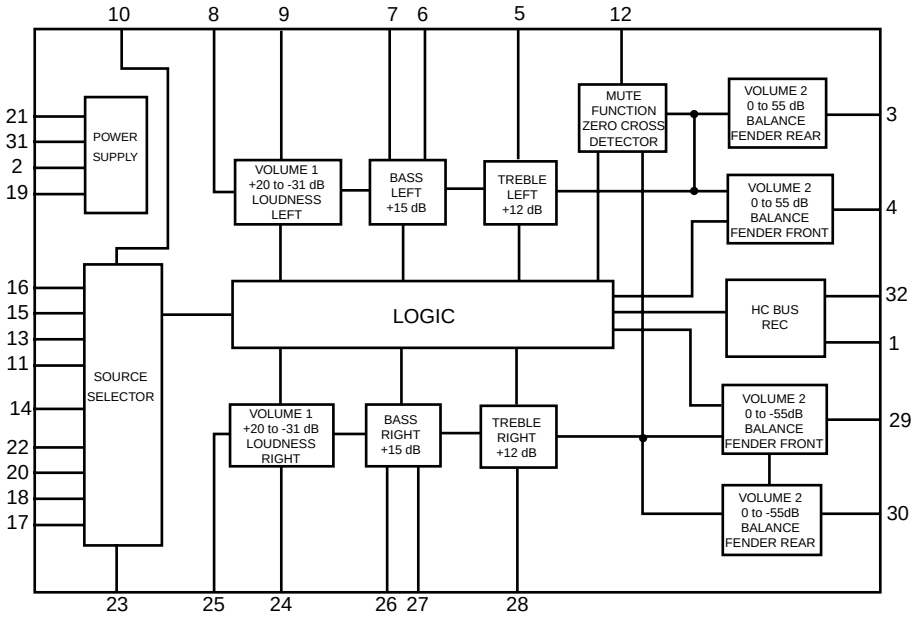

3.Pin Functions

Pin No.	Symbol	I/O	Functions	Pin No.	Symbol	I/O	Functions
1	SDA	I/O	Serial data input/output.	17	IAR	I	Input A right source.
2	GND	-	Ground.	18	IBR	I	Input B right source.
3	OUTLR	O	output left rear.	19	CAP	-	Electronic filtering for supply.
4	OUTLF	O	output left front.	20	ICR	I	Input C right source.
5	TL	I	Treble control capacitor left channel or input from an external equalizer.	21	Vref	-	Reference voltage (0.5Vcc)
6	B2L	-	Bass control capacitor left channel or output to an external equalizer.	22	IDR	-	Not used
7	B1L	-	Bass control capacitor left channel.	23	QSR	O	Output source selector right channel.
8	IVL	I	Input volume 1. left control part.	24	ILR	I	Input loudness right channel.
9	ILL	I	Input loudness. left control part.	25	IVR	I	Input volume 1. right control part.
10	QSL	O	Output source selector. left channel.	26	B1R	-	Bass control capacitor right channel
11	IDL	-	Not used	27	B2R	O	Bass control capacitor right channel or output to an external equalizer.
12	MUTE	-	Not used	28	TR	I	Treble control capacitor right channel or input from an external equalizer.
13	ICL	I	Input C left source.	29	OUTRF	O	Output right front.
14	IMO	-	Not used	30	OUTRR	O	Output right rear.
15	IBL	I	Input B left source.	31	Vcc	-	Supply voltage.
16	IAL	I	Input A left source.	32	SCL	I	Serial clock input.

■ UPD178076GF-525 (IC701): System CPU

1.Terminal layout

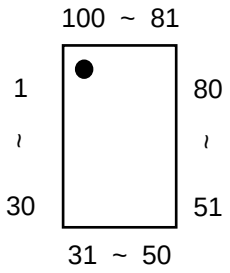

2.Block diagram

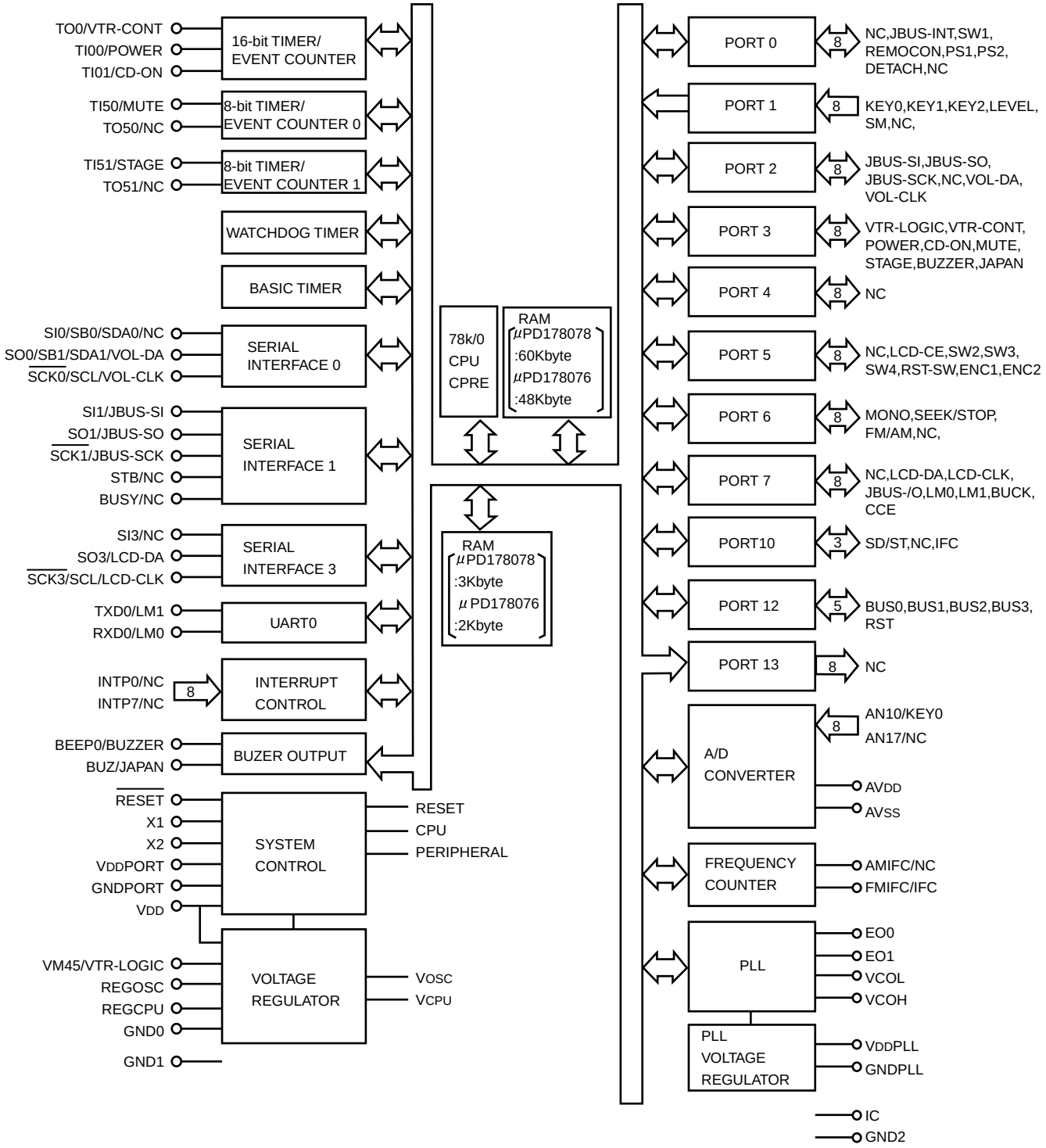

3.Pin function

UPD178076GF-525(1/2)

Pin NO.	Symbol	I/O	FUNCTION
1	NC	-	Non connection
2	BUSINT	I	JVC BUS COMMUNICATION LINE
3	BUSSI	I	JVC BUS COMMUNICATION LINE
4	BUSSO	O	JVC BUS COMMUNICATION LINE
5	JBUS-SCK	O	JVC BUS COMMUNICATION LINE
6	NC	-	Non connection
7	NC	-	Non connection
8	I2CDAI	I	SERIAL DATA INPUT
9	I2CDAO	O	SERIAL DATA OUTPUT
10	I2CCLK	O	SERIAL CLOCK OUTPUT
11	NC	-	Non connection
12	LCDDA	O	LCD DRIVER SERIAL DATA OUTPUT
13	LCDSCK	O	LCD DRIVER SERIAL CLOCK OUTPUT
14	BUSI/O	O	JVC BUS OUTPUT SELECT
15	NC	-	Non connection
16	LCDCE	O	LCD DRIVER COMMUNICATION LINE
17	SW2	I	CD MECHA SW
18	SW3	I	CD MECHA SW
19	SW4	I	CD MECHA SW
20	RSTSW	I	TRAVERSE MECHA REST SW
21	ENC1	I	ENCODER INPUT
22	ENC2	I	ENCORDER INPUT
23	KEY0	I	KEY INPUT
24	KEY1	I	KEY INPUT
25	KEY2	I	KEY INPUT
26	LEVEL	I	AUDIO LEVEL INPUT
27	AVDD	-	---
28	SM	I	SIGNAL LEVEL METER INPUT
29	SQ	I	SIGNAL QUALITY INPUT
30	NC	-	Non connection
31	NC	-	Non connection
32	AVSS	-	---
33	REGCPU	-	---
34	VDD	-	---
35	REGOSC	-	---
36	X2	-	SYSTEM CLOCK
37	X1	I	SYSTEM CLOCK
38	GND0	-	---
39	SD/ST	I	STATION DETECTOR & STEREO IND.
40	GND2	-	---
41	NC	-	Non connection
42	IFC	I	IF COUNT INPUT
43	VDDPLL	-	---
44	OSC	I	FM,AM OSC INPUT
45	NC	-	Non connection
46	GNDPLL	-	---
47	AMEQ	O	PLL ERROR OUTPUT FOR AM
48	FMEQ	O	PLL ERROR OUTPUT FOR FM
49	IC(VPP)	-	SETTING TO WRITE FOR FLASH
50	RESET	I	SYSTEM RESET

UPD178076GF-525(2/2)

Pin NO.	Symbol	I/O	FUNCTION
51	SW1	I	CD MECHA SW
52	REMOCON	I	REMOCON INPUT
53	NC	-	Non connection
54	TEL_MUTE	O	TEL MUTE OUTPUT
55	POWER	O	POWER CONT.
56	CDON	O	CD POWER CONT.
57	MUTE	O	MUTE CONT
58	STAGE 1	-	---
59	BUZZER	-	Non connection
60	STAGE 2	-	---
61	NC	-	Non connection
62	NC	-	Non connection
63	NC	-	Non connection
64	NC	-	Non connection
65	NC	-	Non connection
66	NC	-	Non connection
67	NC	-	Non connection
68	NC	-	Non connection
69	LM0	O	CD MECHA DRIVER CONT.
70	LM1	O	CD MECHA DRIVER CONT.
71	BUCK	O	CD LSI COMMUNICATION LINE
72	CCE	O	CD LSI COMMUNICATION LINE
73	BUS0	I/O	CD LSI COMMUNICATION LINE
74	BUS1	I/O	CD LSI COMMUNICATION LINE
75	BUS2	I/O	CD LSI COMMUNICATION LINE
76	BUS3	I/O	CD LSI COMMUNICATION LINE
77	RST	O	CD LSI COMMUNICATION LINE
78	PS1	I	ACC DETECTION INPUT
79	PS2	I	MEMORY DETECTION
80	DETACH	I	DETACH DETECTION
81	RDSSCK	I	CLOCK INPUT FOR RDS
82	GND1	-	---
83	MONO	O	MONO BY FORCE
84	SEEK/STOP	O	SWITCHING SEEK & STOP
85	FM/AM	O	BAND SW
86	AFCK	O	AF CHECK OUTPUT
87	RDSDATA	I	RDS DATA INPUT
88	PLLMONITOR	-	Non connection
89	NC	-	Non connection
90	NC	-	Non connection
91	NC	-	Non connection
92	NC	-	Non connection
93	NC	-	Non connection
94	NC	-	Non connection
95	NC	-	Non connection
96	NC	-	Non connection
97	NC	-	Non connection
98	NC	-	Non connection
99	VDDPORT	-	---
100	GNDPORT	-	---

■ BA4905-V3 (IC961) : Regulator

1.Terminal layout

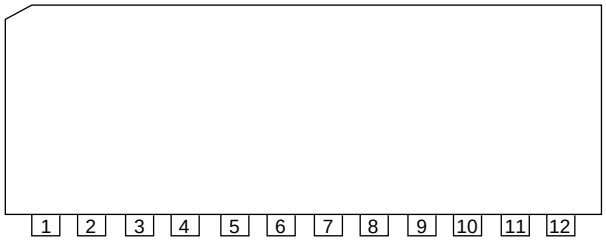

2.Block daigram

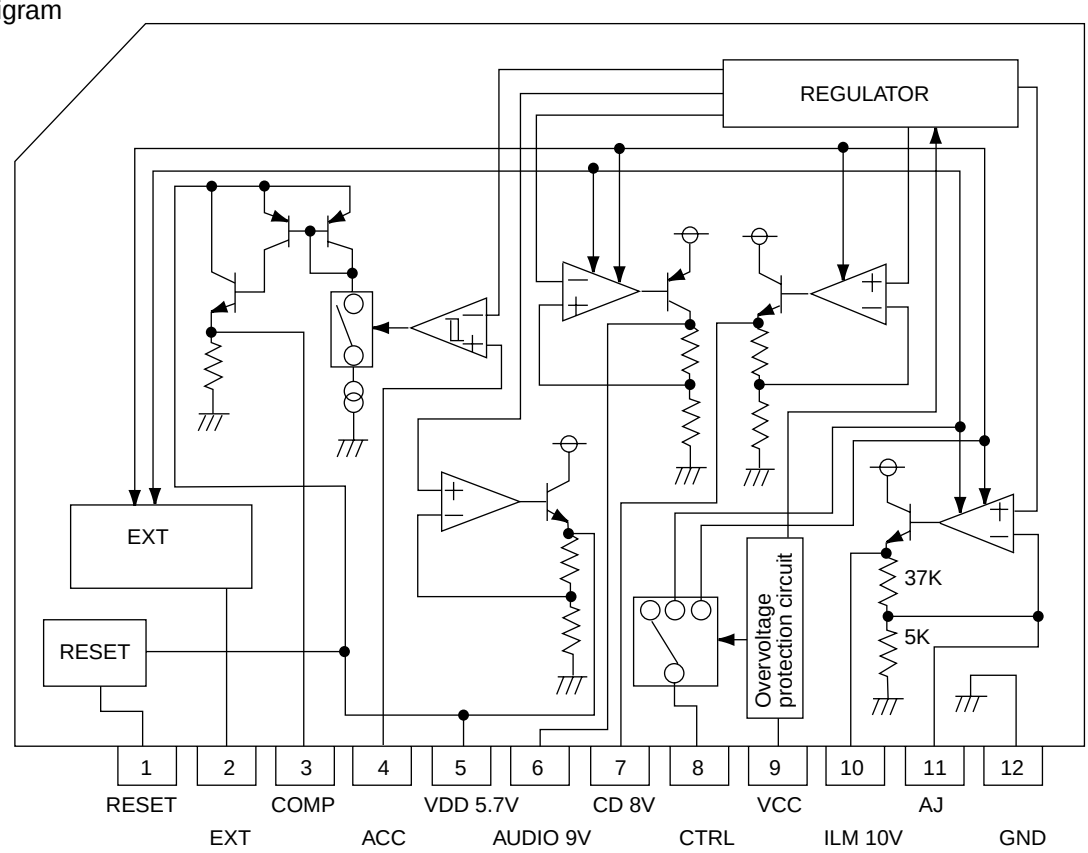

3.Pin function

Pin no.	Symbol	Function
1	RESET	If VDD voltage becomes 4V or less.RESET output becomes low level.
2	EXT output	This output voltage is approximately 0.5V lower than VCC. and max output current is 300mA.
3	COMP output	A voltage supply for ACC block. This output voltage is approximately 0.7V lower than VDD'S. The max output current is 100mA.
4	ACC	Control of the COMP output by inputting voltage.
5	VDD output	This output voltage is 5.7V, and max output current is 100mA. This voltage supply is for microcomputer. Whenever back up voltage supply is connected, the output keeps on running.
6	AUDIO output	This output voltage is 9.0v, and max output current is 500mA. This voltage supply for AUDIO.
7	CD output	This output voltage is 8.0V, and max output current is 1A. This voltage supply for CD.
8	CTRL	Output selector of CD. AUDIO, ILM and EXT.
9	VCC	To be connected with the BACK UP of car.
10	ILM output	This output voltage is 10V, and max output current is 500mA. Output voltage is adjustable.
11	AJ	Putting a resistance between ILM and AJ or between AJ and GND makes ILM output voltage adjustable.
12	GND	Ground.

■ HA13158A (IC301) : Power amp

1. Pin layout

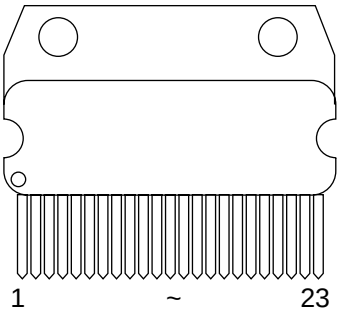

2. Block diagram

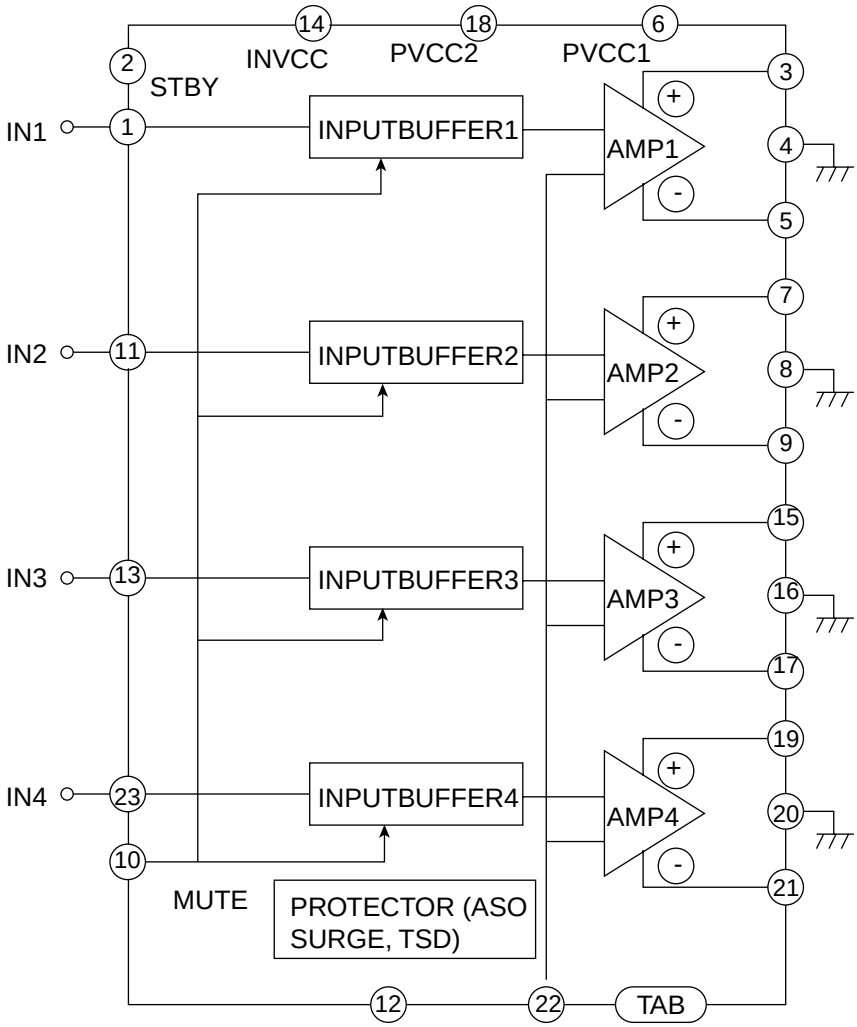

■ HD74HC126FP-X (IC801) : Buffer

1.Terminal layout

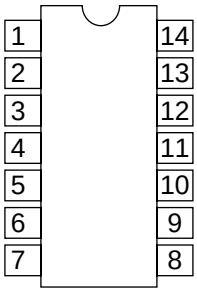

3.Pin function

Input		Outout
C	A	Y
L	X	Z
H	L	H
H	H	L

2.Block diagram

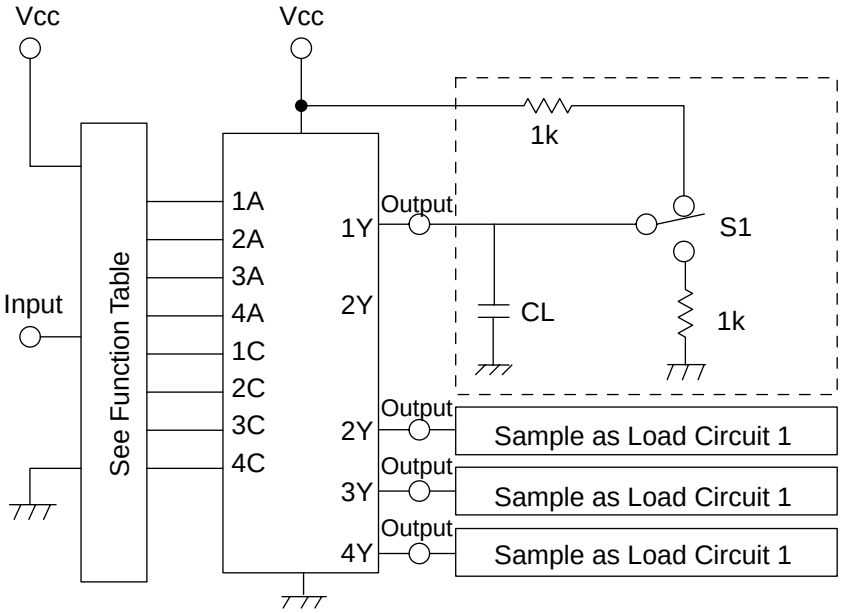

■ LA6557-X(IC501) : Servo BTL driver

1. Block diagram

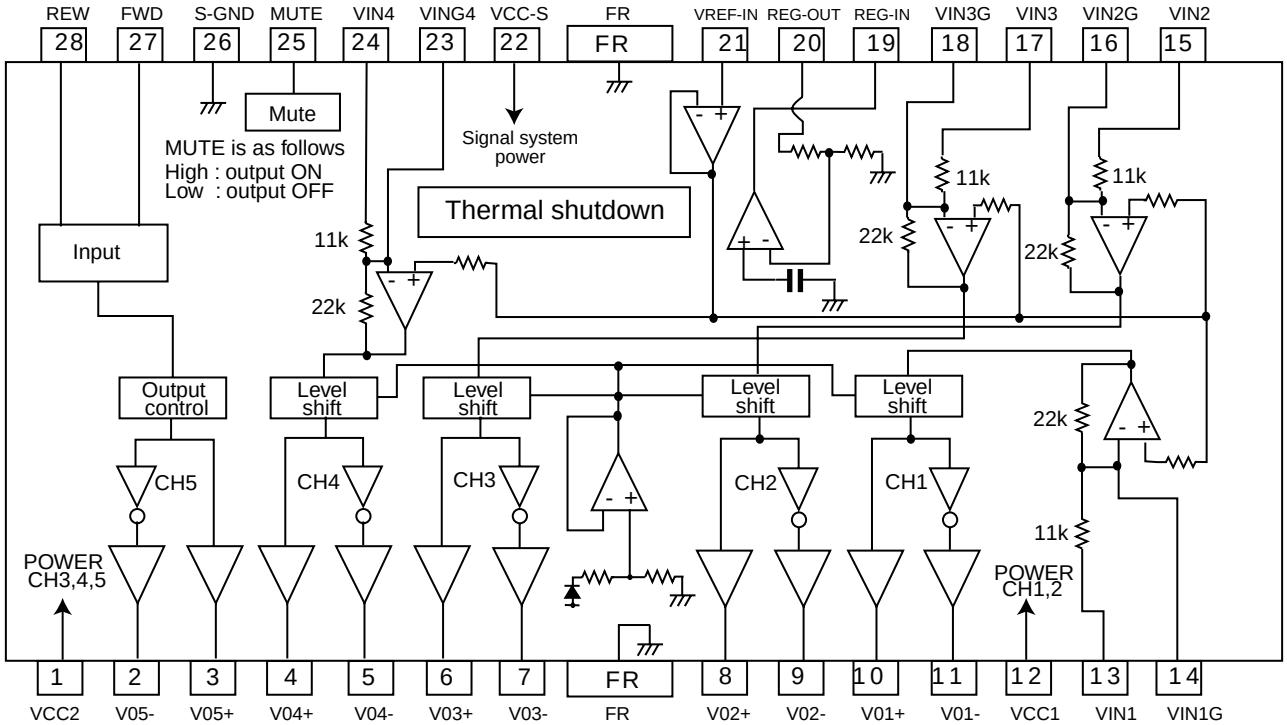

2.Pin function

Pin No.	Pin Name	Description
1	VCC2	Power for channels 3,4, and 5 (VCC1 and VCC-S short-circuited)
2	V05-	Loading output (-)
3	V05+	Loading output (+)
4	V04+	Output pin (+) for channel 4
5	V04-	Output pin (-) for channel 4
6	V03+	Output pin (+) for channel 3
7	V03-	Output pin (-) for channel 3
8	V02+	Output pin (+) for channel 2
9	V02-	Output pin (-) for channel 2
10	V01+	Output pin (+) for channel 1
11	V01-	Output pin (-) for channel 1
12	VCC1	Power for channels 1 and 2 (BTL), (VCC-S and VCC2 short-circuited)
13	VIN1	Input pin for channel 1
14	VIN1G	Input pin for channel 1 (for gain control)
15	VIN2	Input pin for channel 2
16	VIN2G	Input pin for channel 2 (for gain control)
17	VIN3	Input pin for channel 3
18	VIN3G	Input pin for channel 3 (for gain control)
19	REG-IN	Regulator pin (External PNP base)
20	REG-OUT	Regulator pin (External PNP collector)
21	VRFE-IN	Reference voltage input pin
22	VCC-S	Signal system power (VCC1 and VCC2 short-circuited)
23	VIN4G	Input pin for channel 4 (for gain control)
24	VIN4	Input pin for channel 4
25	MUTE	Output ON/OFF, channels 1 to 4 (BTL AMP)
26	S-GND	Signal system GND
27	FWD	5CH(VL0) Output change pin (FWD), Logic input for loading block
28	REV	5CH(VL0) Output change pin (REW), Logic input for loading block

■ LC75823W (IC601) : LCD driver

1. Pin Layout & Symbol

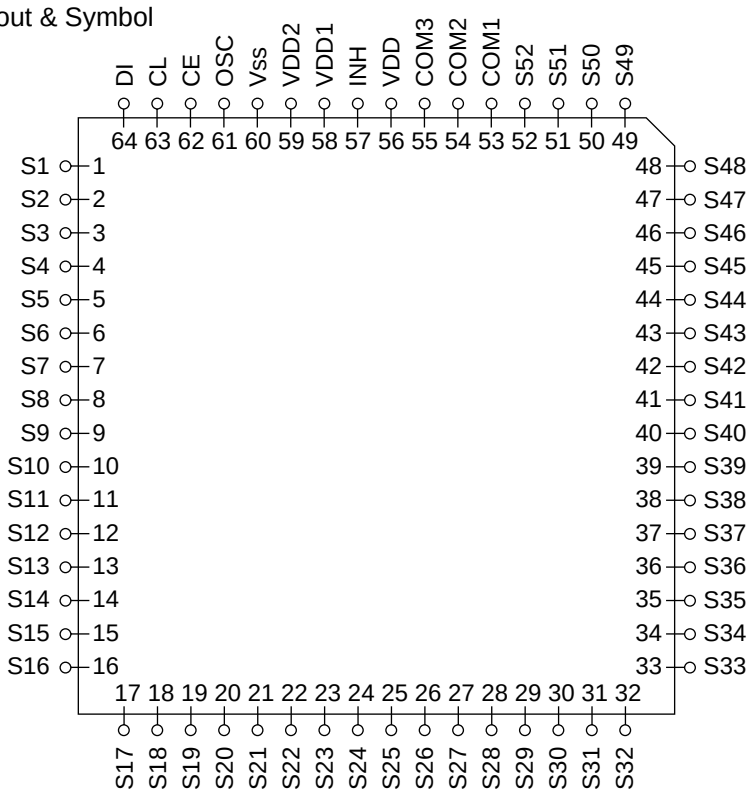

2. Pin Function

Pin No.	Symbol	I/O	Function
1 to 52	S1 to S52	O	Segment output pins used to display data transferred by serial data input.
53 to 55	COM1 to COM3	O	Common driver output pins. The frame frequency is given by : t0=(fosc/384)Hz.
56	VDD	--	Power supply connection. Provide a voltage of between 4.5 and 6.0V.
57	$\overline{\text{INH}}$	I	Display turning off input pin. $\overline{\text{INT}}$="L" (Vss) ----- off (S1 to S52, COM1 to COM3="L" $\overline{\text{INT}}$="H" (VDD)----- on Serial data can be transferred in display off mode.
58	VDD1	I	Used for applying the LCD drive 2/3 bias voltage externally. Must be connected to VDD2 when a 1/2 bias drive scheme is used.
59	VDD2	I	Used for applying the LCD drive 1/3 bias voltage externally. Must be connected to VDD1 when a 1/2 bias drive scheme is used.
60	Vss	--	Power supply connection. Connect to GND.
61	OSC	I/O	Oscillator connection. An oscillator circuit is formed by connecting an external resistor and capacitor at this pin.
62	CE	I	Serial data interface connection to the controller. CE : Chip enable
63	CL		CL : Sync clock
64	DI		DI : Transfer data

■ TC9462F (IC541) : DSP & DAC

1.Pin Layout

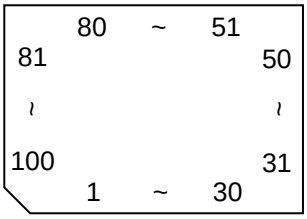

2.Pin Function (1/2)

Pin No.	Symbol	I/O	Function
1	TEST0	I	Test mode terminal. Normally, keep at open
2	HSO	O	Playback speed mode flag output terminal
3	UHSO	O	Playback speed mode flag output terminal
4	EMPH	O	Sub code Q data emphasis flag output terminal. "H"=ON "L"=OFF
5	LRCK	O	Channel clock output terminal.(44.1kHz) "H"=Rch "L"=Lch
6	Vss	-	Digital GND terminal
7	BCK	O	Bit clock output terminal. (1.4122MHz)
8	AOUT	O	Audio data output terminal
9	DOUT	O	Digital data output terminal
10	MBOV	O	Buffer memory over signal output terminal.
11	IPF	O	Correction flag output terminal
12	SBOK	O	Sub code Q data CRCC check adjusting result output terminal. "H"=result OK
13	CLCK	I/O	Sub code P~W data readout input/output terminal
14	Vdd	-	Digital power supply voltage terminal
15	Vss	-	Digital GND terminal
16	DATA	O	Sub code P~W data output terminal
17	SFSY	O	Play-back frame sync signal output terminal
18	SBSY	O	Sub code block sync signal output terminal
19	SPCK	O	Processor status signal readout clock output terminal
20	SPDA	O	Processor status signal output terminal
21	COFS	O	Correction frame clock output terminal (7.35kHz)
22	MONIT	O	Internal signal (DSP internal flag and PLL clock) output terminal
23	Vdd	-	Digital power supply voltage terminal
24	TESIO0	I	Test input/output terminal. Normally, keep at "L" level
25	P2VREF	-	PLL double reference voltage supply terminal
26	HSSW	O	2/4 times speed at "Vref" voltage
27	ZDET	O	1bit DA converter zero detect flag output terminal
28	PDO	O	Phase difference signal output terminal of EFM signal and PLCK signal
29	TMAXS	O	TMAX detection result output terminal. Selected by command bit (TMPS)
30	TMAX	O	TMAX detection result output terminal. Selected by command bit (TMPS)
31	LPFN	I	LPF amplifier inverting input terminal for PLL
32	LPFO	O	LPF amplifier output terminal for PLL
33	PVREF	-	PLL reference voltage supply terminal
34	VCOREF	I	VCO center frequency reference level terminal
35	VCOF	O	VCO filter terminal
36	AVss	-	Analog GND terminal
37	SLCO	O	Data slice level output terminal
38	RFI	I	RF signal input terminal
39	AVDD	-	Analog power supply voltage terminal

2.Pin Function (2/2)

TC9462F

Pin No.	Symbol	I/O	Function
40	RFCT	I	RFRP signal center level input terminal
41	RFZI	I	RFRP zero cross input terminal
42	RFRP	I	RF ripple signal input terminal
43	FEI	I	Focus error signal input terminal
44	SBAD	I	Sub-beam adder signal input terminal
45	TSIN	I	Test input terminal Normally, keep at "vref" level
46	TEI	I	Tracking error signal input terminal. Take in at tracking servo ON.
47	TEZI	I	Tracking error zero cross input terminal
48	FOO	O	Focus servo equalizer output terminal
49	TRO	O	Tracking servo equalizer output terminal
50	VREF	-	Analog reference voltage supply terminal
51	RFGC	O	RF amplitude adjustment control signal output terminal
52	TEBC	O	Tracking balance control signal output terminal
53	FMO	O	Feed equalizer output terminal
54	FVO	O	Speed error signal or feed search equalizer output terminal
55	DMO	O	Disk equalizer output terminal (PWM carrier=88.2kHz for DSP, Synchronize to PXO)
56	2VREF	-	Analog double reference voltage supply terminal
57	SEL	O	APC circuit ON/OFF indication signal output terminal
58~61	FLGA~D	O	External flag output terminal for internal signal
62	VDD	-	Digital power supply voltage terminal
63	VSS	-	Digital GND terminal
64~67	IO0~3	I/O	General I/O terminal
68	DMOUT	I	This terminal control IO0~IO3 terminal
69	CKSE	I	Normally, keep at open
70	DACT	I	DAC test mode terminal. Normally, keep at open
71	TESIN	I	Test input terminal, Normally, keep at "L" level
72	TESIO1	I	Test input/output terminal. Normally, keep at "L" level
73	VSS	-	Digital GND terminal
74	PXI	I	Crystal oscillator connecting input terminal for DSP
75	PXO	O	Crystal oscillator connecting output terminal for DSP
76	VDD	-	Digital power supply voltage terminal
77	XVSS	-	Oscillator GND terminal for system clock
78	XI	I	Crystal oscillator connecting input terminal for system clock
79	XO	O	Crystal oscillator connecting output terminal for system clock
80	XVDD	-	Oscillator power supply voltage terminal for system clock
81	DVSR	-	Analog GND terminal for DA converter (Rch)
82	RO	O	R channel data forward output terminal
83	DVDD	-	Analog supply voltage terminal for DA converter
84	DVR	-	Reference voltage terminal for DA converter
85	LO	O	L channel data forward output terminal
86	DVSL	-	Analog GND terminal for DA converter (Lch)
87~89	TEST1~3	I	Test mode terminal . Normal keep at open
90~93	BUS0~3	I/O	Micon interface data input/output terminal
94	VDD	-	Digital power supply voltage terminal
95	VSS	-	Digital GND terminal
96	BUCK	I	Micon interface clock input terminal
97	CCE	I	Command and data sending/receiving chip enable signal input terminal
98	TEST4	I	Test mode terminal. Normal, keep at open
99	TSMOD	I	Local test mode selection terminal
100	RST	I	Reset signal input terminal. Reset at "L" level

■ SAA6579T-X (IC71) : RDS demodulator

1. Pin layout

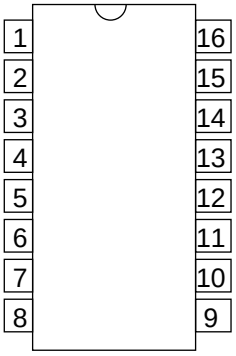

2. Pin function

Pin No.	Symbol	Function
1	QUAL	Quality indication output
2	RDDA	RDS data output
3	Vref	Reference voltage output (0.5VDDA)
4	MUX	Multiplex signal input
5	VDDA	+5V supply voltage for anarog part
6	VSSA	Ground for analog part (0V)
7	CIN	Subcarrier input to comparator
8	SCOUT	Subcarrier output of reconstruction filter
9	MODE	Oscillator mode / test sontrol input
10	TEST	Test enable input
11	VSSD	Ground for digital part (0V)
12	VDDD	+5V supply voltage for digital part
13	OSCI	Oscillator input
14	OSCO	Oscillator output
15	T57	57kHz clock signal output
16	RDCL	RDS clock output

3. Block diagram

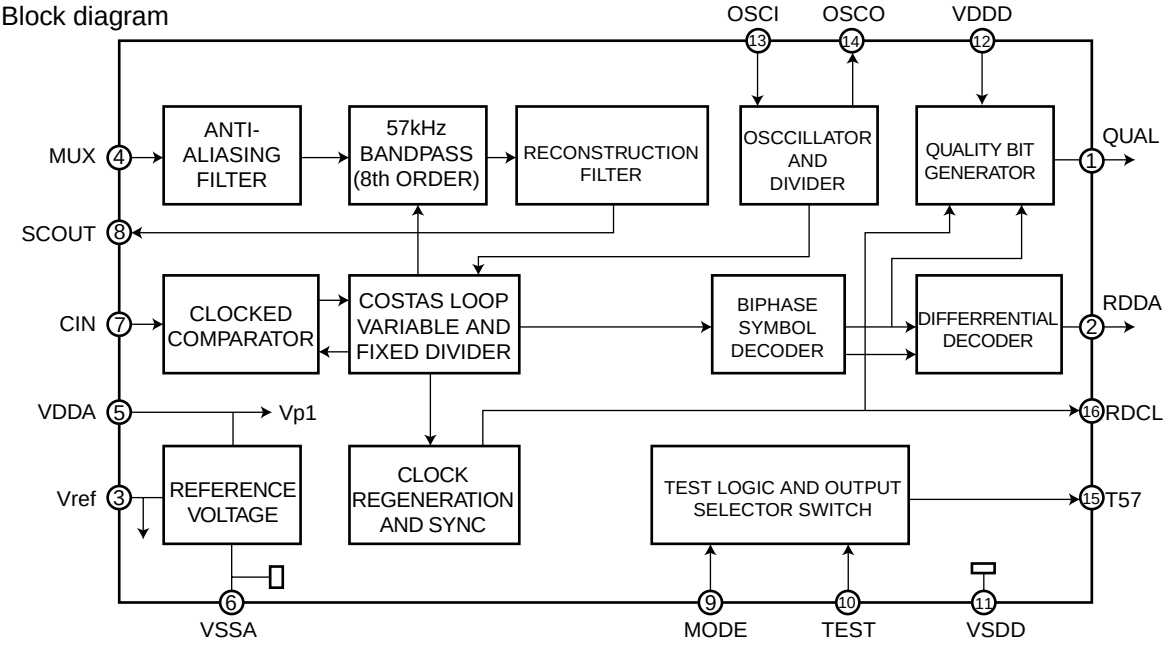

■ TA2109F-X (IC521) : RF amp.

1. Pin layout

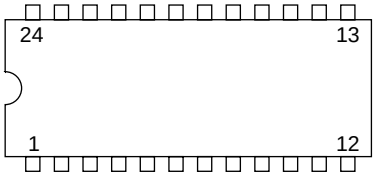

2. Block diagram

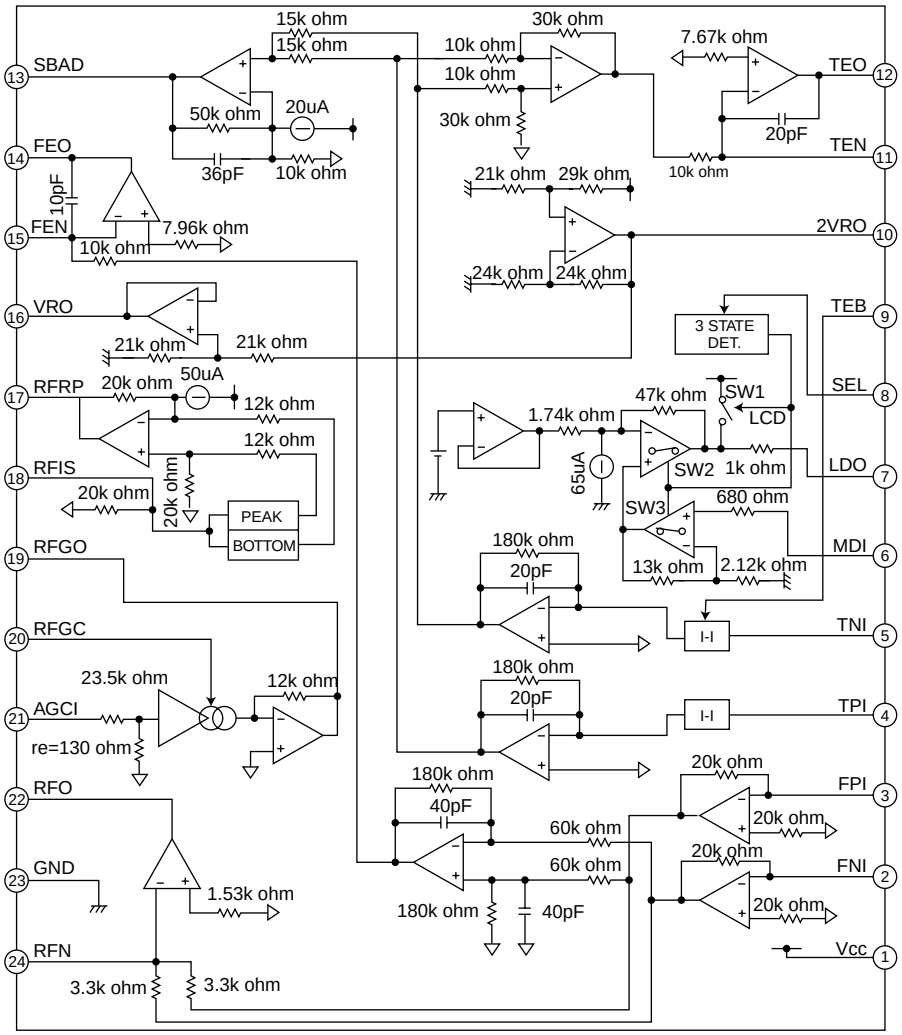

3. Pin function

Pin No.	Symbol	I/O	Pin function	Pin No.	Symbol	I/O	Pin function
1	Vcc	-	Power supply input terminal	13	SBAD	O	Sub beam adder signal output terminal
2	FNI	I	Main beam I-V amp input terminal	14	FEO	O	Focus error signal output terminal
3	FPI	I	Main beam I-V amp input terminal	15	FEN	I	FE amp negative input terminal
4	TPI	I	Sub beam I-v input terminal	16	VRO	O	Reference voltage (VREF) output terminal
5	TNI	I	Sub beam I-V input terminal	17	RFRP	O	Track count signal output terminal
6	MDI	I	Monitor photo diode amp input terminal	18	RFIS	I	RFRP detect circuit input terminal
7	LDO	O	Laser diode amp output terminal	19	RFGO	O	RF gain signal output terminal
8	SEL	I	Laser diode control signal input terminal	20	RFGC	I	RF amplitude adj. control signal input terminal
9	TEB	I	T. error balance adj. signal input terminal	21	AGCI	I	RF signal amplitude adj. amp input terminal
10	2VRO	O	Reference voltage output terminal	22	RFO	O	RF signal output terminal
11	TEN	I	TE amp negative input terminal	23	GND	-	Ground terminal
12	TEO	O	TE error signal output terminal	24	RFN	I	RF amp negative input terminal

■ RPM6938-SV4(IC652) : Remote sensor

1.Block diagram

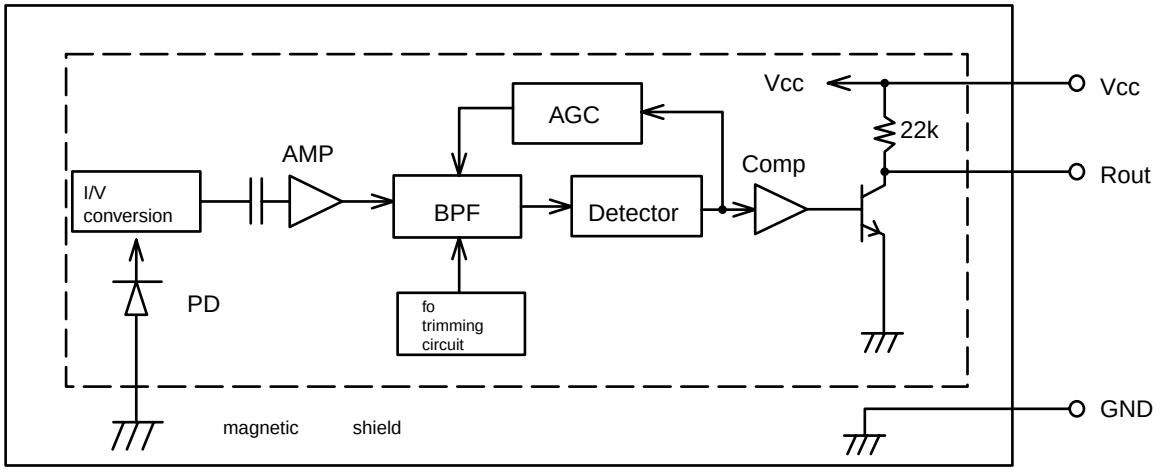

■ NJM4565M-WE (IC581) : Ope. amp

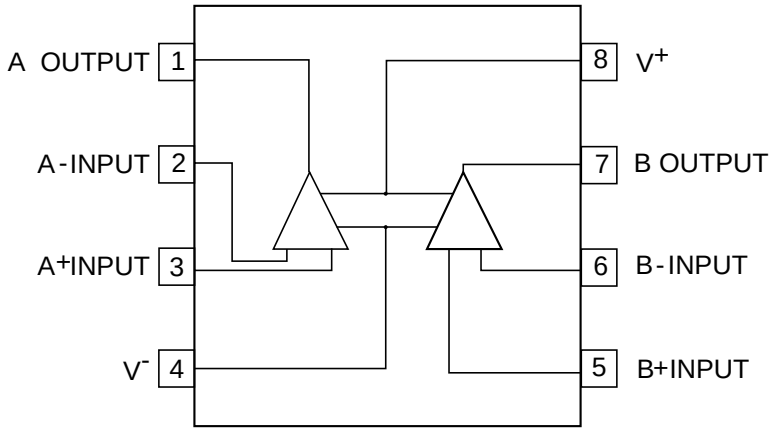

VICTOR COMPANY OF JAPAN, LIMITED
MOBILE ELECTRONICS DIVISION
PERSONAL & MOBILE NETWORK BUSINESS UNIT. 10-1,1Chome,Ohwatari-machi,Maebashi-city,Japan

(No.49611)

Printed in Japan
200102(V)

Block diagram

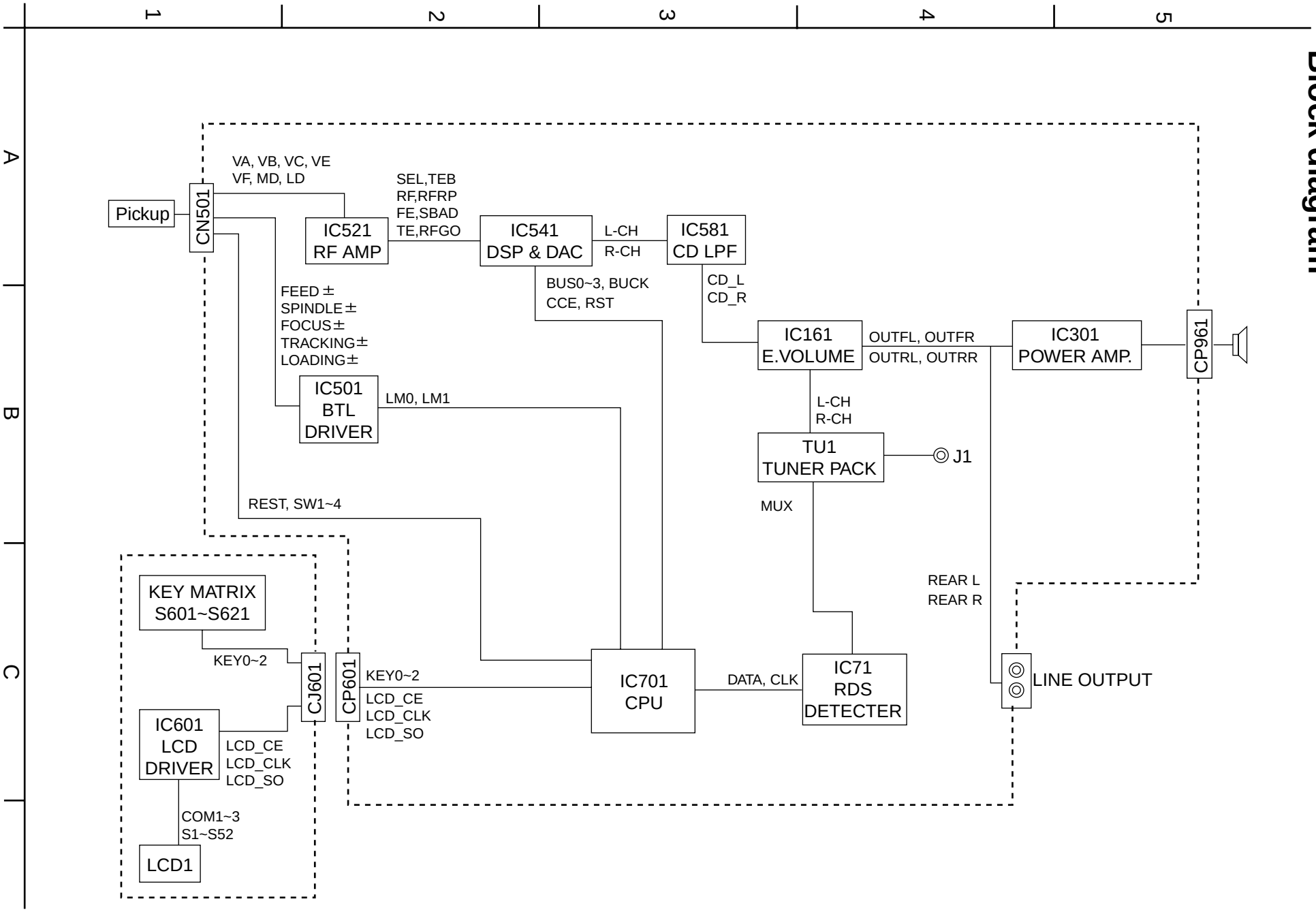

< MEMO >

Standard schematic diagrams

NOTES
1. VOLTAGES ARE DC-MEASURED WITH A DIGITAL VOLT METER WITHOUT INPUT SIGNAL CONDITION----FM MODE. ▭ AM MODE. ( )CD MODE.
2. UNLESS OTHERWISE SPECIFIED.
   ALL RESISTORS ARE 1/10W ±5% METAL GLAZE RESISTOR.
   ALL CAPACITORS ARE 50V OR 25V CERAMIC CAPACITOR.
   ALL RESISTANCE VALUES ARE IN OHM.
   ALL CAPACITANCE VALUES ARE IN uF(P=pF)
   ALL E-CAPACITORS ARE SHOWN IN THE FORM OF CAPACITANCE(uF)/RATED VOLTAGE(V)
   TF ---- T.F. CAPACITOR

■Main amp. section

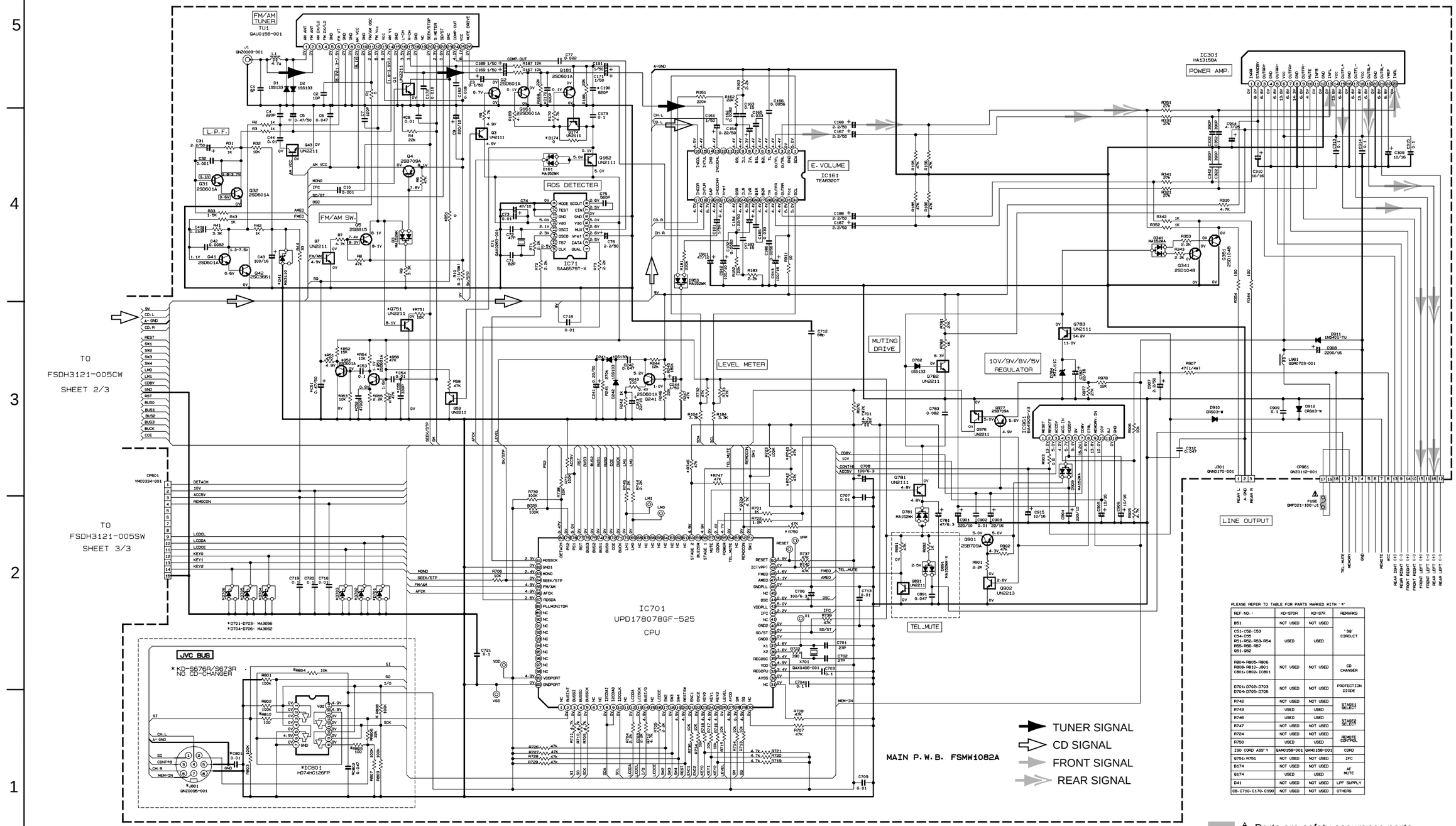

PLEASE REFER TO TABLE FOR PARTS MARKED WITH '*'

REF.NO.*	KD-S70R	KD-S7R	REMARKS
B51	NOT USED	NOT USED	
C51-C52-C53 C54-C55 R51-R52-R53-R54 R55-R56-R57 Q51-Q52	USED	USED	'SG' CIRCUIT
R804-R805-R806 R808-R810-J801 C801-C802-IC801	NOT USED	NOT USED	CD CHANGER
D701-D702-D703 D704-D705-D706	NOT USED	NOT USED	PROTECTION DIODE
R742	NOT USED	NOT USED	STAGE SELECT
R743	USED	USED	
R746	USED	USED	STAGE SELECT
R747	NOT USED	NOT USED	
R724	NOT USED	NOT USED	
R750	USED	USED	REMOTE CONTROL
ISO CORD ASS'Y	QAM0158-001	QAM0158-001	CORD
Q751-R751	NOT USED	NOT USED	IFC
B174	NOT USED	NOT USED	AF MUTE
Q174	USED	USED	
Q41	NOT USED	NOT USED	LPF SUPPLY
CN-C710-C170-C190	NOT USED	NOT USED	OTHERS

⚠ Parts are safety assurance parts. When replacing those parts make sure to use the specified one.

■CD servo section

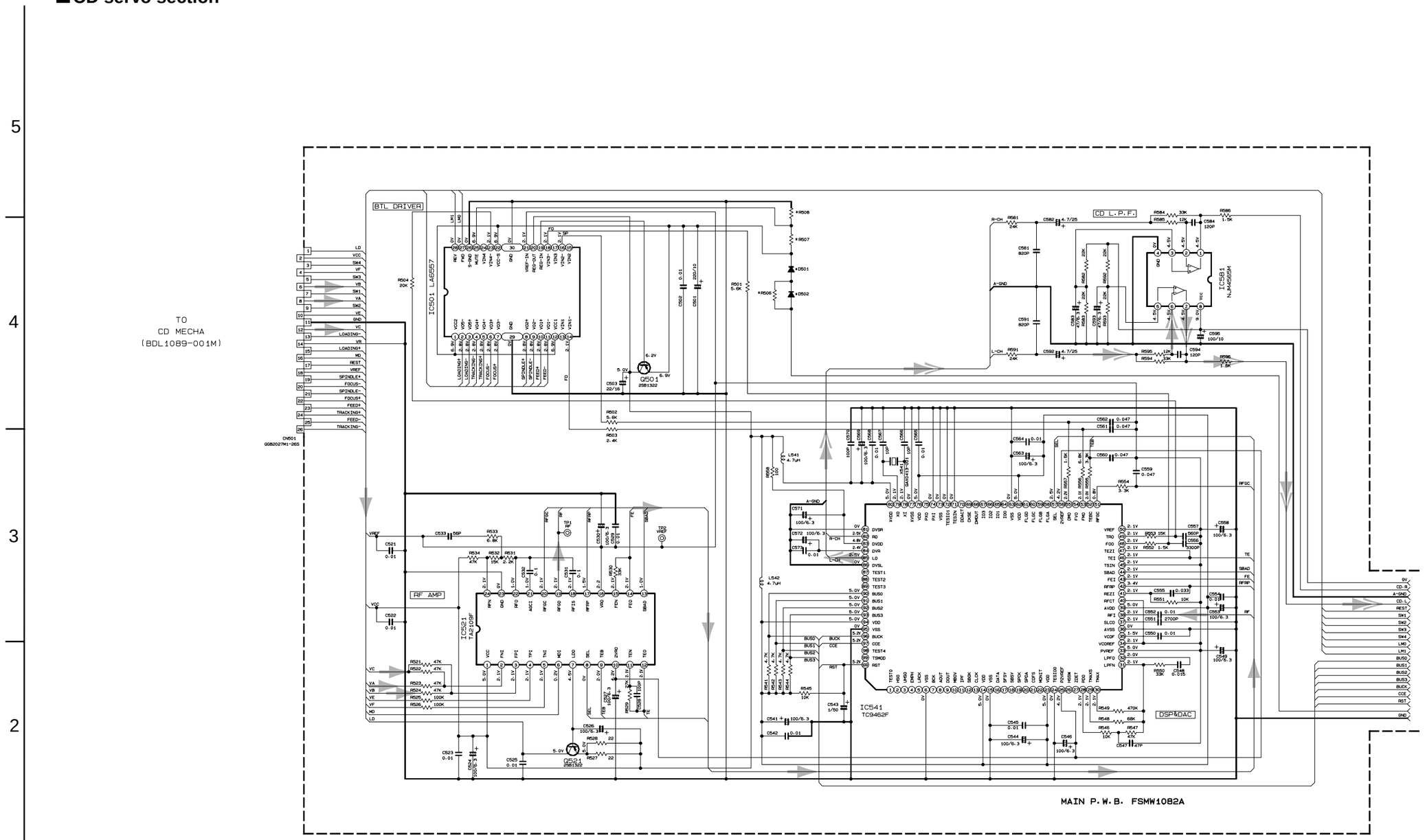

PLEASE REFER TO TABLE FOR PARTS MARKED WITH '*'

REF.NO.	KD-S7OR	KD-S7R	REMARKS
D501	DSK10C	DSK10C	
D502	DSK10C	DSK10C	
R506	NOT USED	NOT USED	
R507	0	0	
R508	NOT USED	NOT USED	

DIGITAL SIGNAL
ANALOG SIGNAL

■LCD & key control section

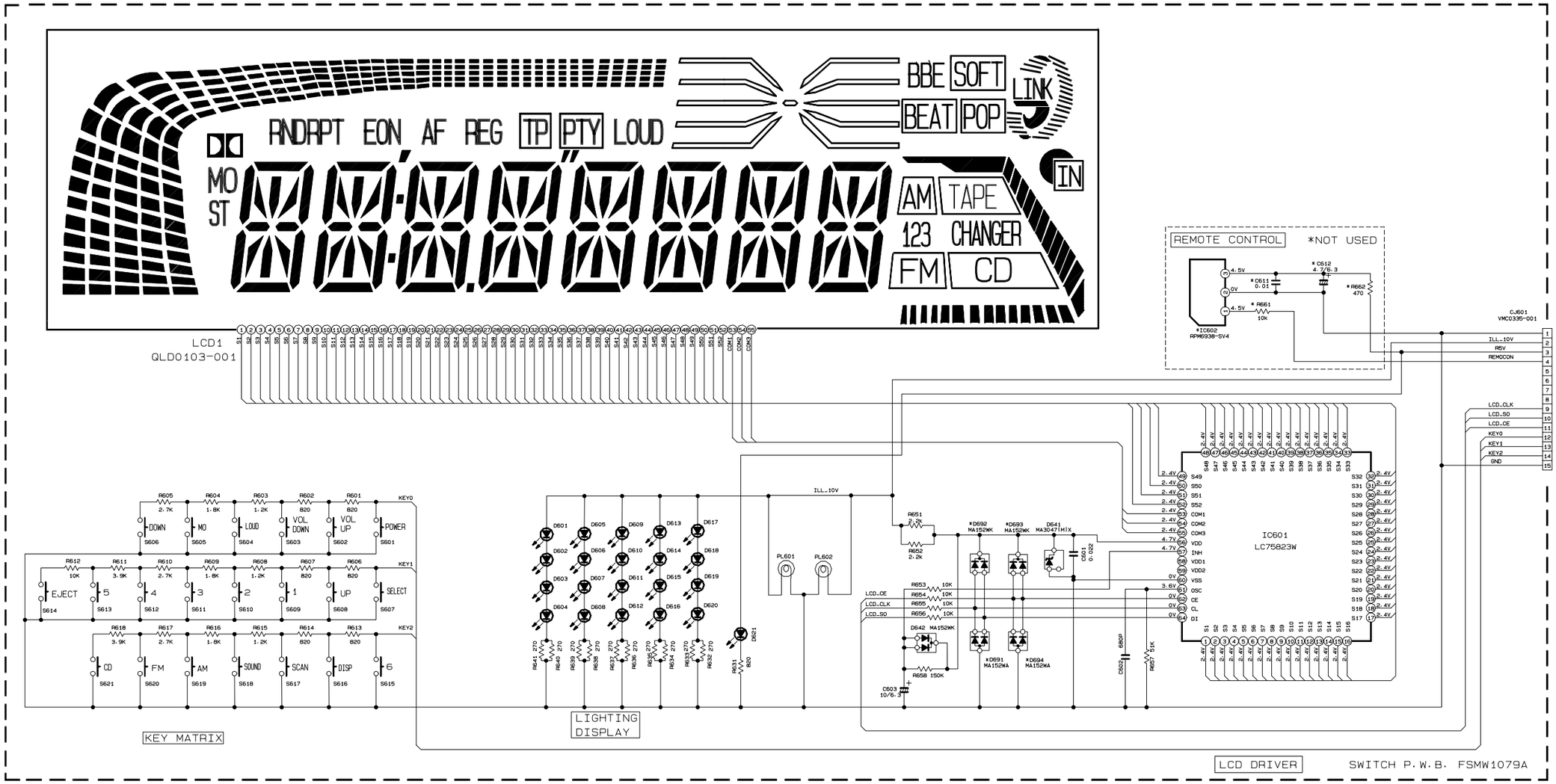

FRONT CIRCUIT BOARD SECTION

PLEASE REFER TO TABLE FOR PARTS MARKED WITH '*'

REF.NO.	KD-S676R	KD-S673R	REMARKS
D621	SML-310LT/MN/-X	SML-310LT/MN/-X	POWER LED
IC602 R661·R662 C611·C612	NOT USED	NOT USED	REMOTE CONTROL
D601 ~ D620	LNJ308G81/1-3/X	SML-310DT/KL/-X	F.PANEL ILLUM.
S601 ~ S618	NSW0124-001	NSW0124-001	TACT SWITCH
PL601-PL602	GLL0056-001	GLL0175-001	PILOT LAMP

Printed circuit boards

5

4

3

2

1

■Main board

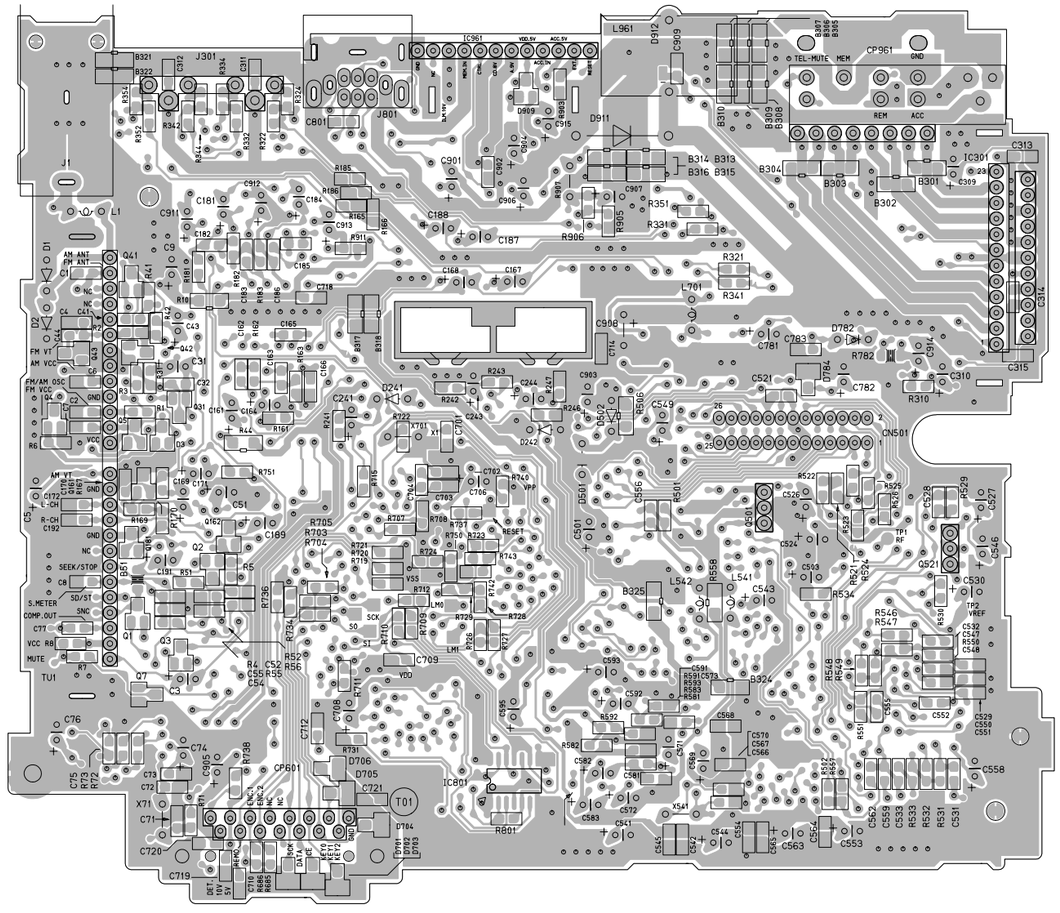

■Switch board (Forward side)

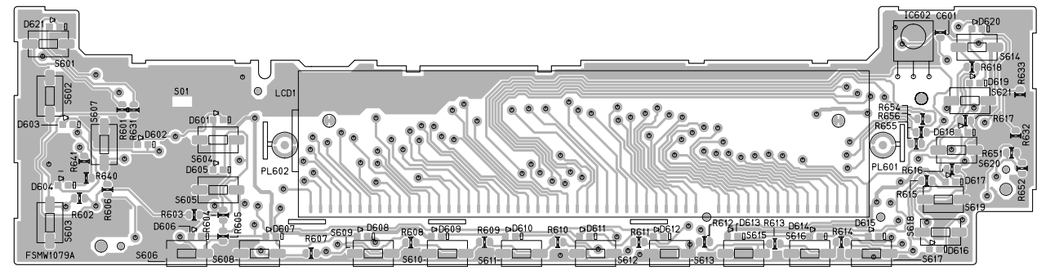

■Switch board (Reverse side)

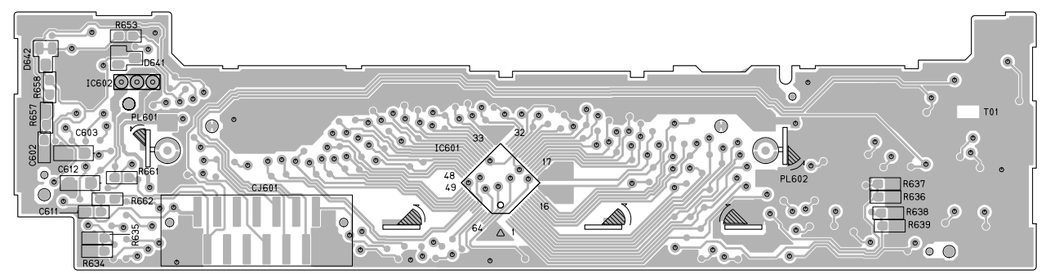

A B C 2-6 D E F G H

PARTS LIST

[KD-S7R]

* All printed circuit boards and its assemblies are not available as service parts.

Area suffix

E ---------- Continental Europe
EX ---------- Central Europe

- Contents -

Exploded view of general assembly and parts list ---------- 3- 2
CD mechanism assembly and parts list ---------- 3- 4
Electrical parts list ---------- 3- 7
Packing materials and accessories parts list ---------- 3-12

Exploded view of general assembly and parts list

Block No. M 1 M M

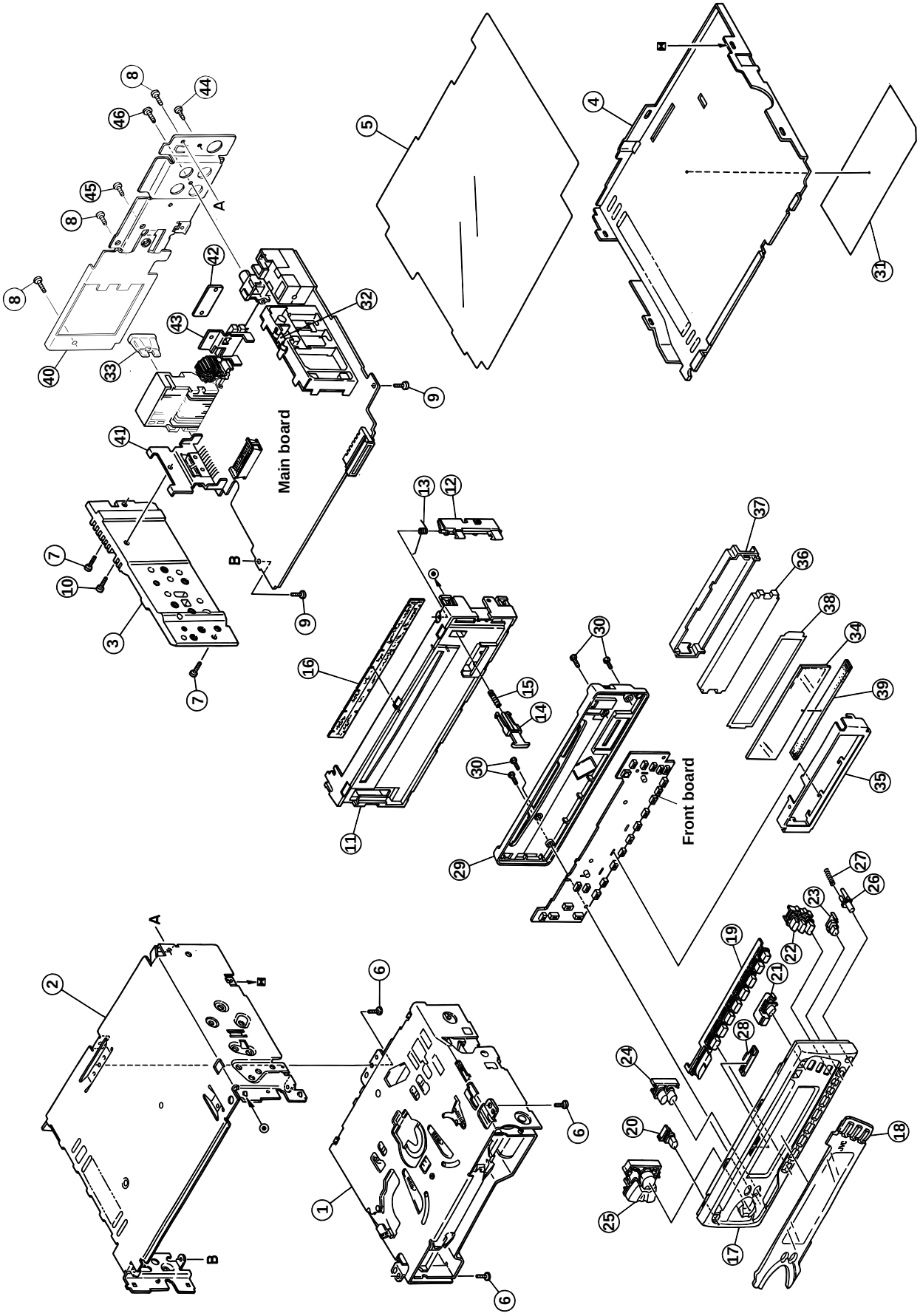

■ Parts list (General assembly)

Block No. M1MM

⚠	Item	Parts number	Parts name	Q'ty	Description	Area
	1	----------	CD MECHA	1		
	2	FSJC1029-404	TOP CHASSIS	1		
	3	FSMH3001-202	SIDE PANEL	1		
	4	FSKM3011-002	BOTTOM COVER	1		
	5	FSMA3004-003	INSULATOR	1		
	6	QYSDST2604Z	SCREW	3	CHASSIS+MECHA B	
	7	FSKZ4005-001	SCREW	2	CHASSIS+SIDE PA	
	8	QYSDST2604Z	SCREW	3	CHASSIS+REAR BK	
	9	QYSDST2606Z	SCREW	2	CHASSIS+MAIN PW	
	10	FSKZ4005-001	SCREW	1	SIDE PANEL+IC B	
	11	FSJC2013-002	FRONT CHASSIS	1		
	12	FSKS3010-001	LOCK LEVER	1		
	13	FSKW4005-003	TORSION SPRING	1	FOR LOCK LEVEL	
	14	FSXP3026-002	RLS KNOB	1		
	15	FSKW3002-015	COMP.SPRING	1		
	16	FSPK3009-001	BLIND	1		
	17	FSJC1057-002	FRONT PANEL	1		
	18	FSJD3023-00L	FINDER ASSY	1		
	19	FSXP2035-102	PRESET BUTTON	1	1-6,TP/RDS,PTY	
	20	FSXP3053-002	POWER BUTTON	1		
	21	FSXP3054-002	EJECT BUTTON	1		
	22	FSXP2034-034	D.FUNC BUTTON	1	CD/FM/AM	
	23	FSXP4005-019	BBE BUTTON	1	SCM	
	24	FSXP3068-002	PUSH BUTTON	1	DISP,MO/RND	
	25	FSXP2044-001	COMBO BUTTON	1		
	26	FSXP3055-001	DETACH BUTTON	1		
	27	FSKW3002-012	COMP. SPRING	1	FOR DETACH BUTT	
	28	FSJK3026-001	CD LENS	1		
	29	FSJC1043-002	REAR COVER	1		
	30	VKZ4777-001	MINI SCREW	4	FRONT+REAR	
	31	GE30249-002A	NAME PLATE	1		
	32	VMA4652-001SS	EARTH PLATE	1		
⚠	33	QMFZ021-100-J1	FUSE	1		
	34	QLD0126-001	LCD MODULE	1	LCD1	
	35	FSYH3023-001	LCD CASE	1		
	36	FSJK3035-001	LCD LENS	1		
	37	FSKS3022-002	LENS CASE	1		
	38	FSYH4078-001	LIGHT SHEET	1		
	39	QNZ0442-001	RUBBER CONNE	1		
	40	FSKM3012-012	REAR BRACKET	1		
	41	FSKL4018-00B	IC BRACKET	1		
	42	FSKL4014-001	HEAT SINK	1		
	43	FSKL4015-002	REG BRACKET	1		
	44	QYSDST2606Z	SCREW	1	FOR ANT	
	45	QYSDST2606Z	SCREW	1	16P & TR BRACK	
	46	QYSDSF3006Z	SCREW	1	LINE OUT	

CD mechanism assembly and parts list

Block No. M 2 M M

TN-CCD1001Z-136J

Grease
- ★ G-31SA
- ※ G-31SA(Bottom side)
- ● RX-405

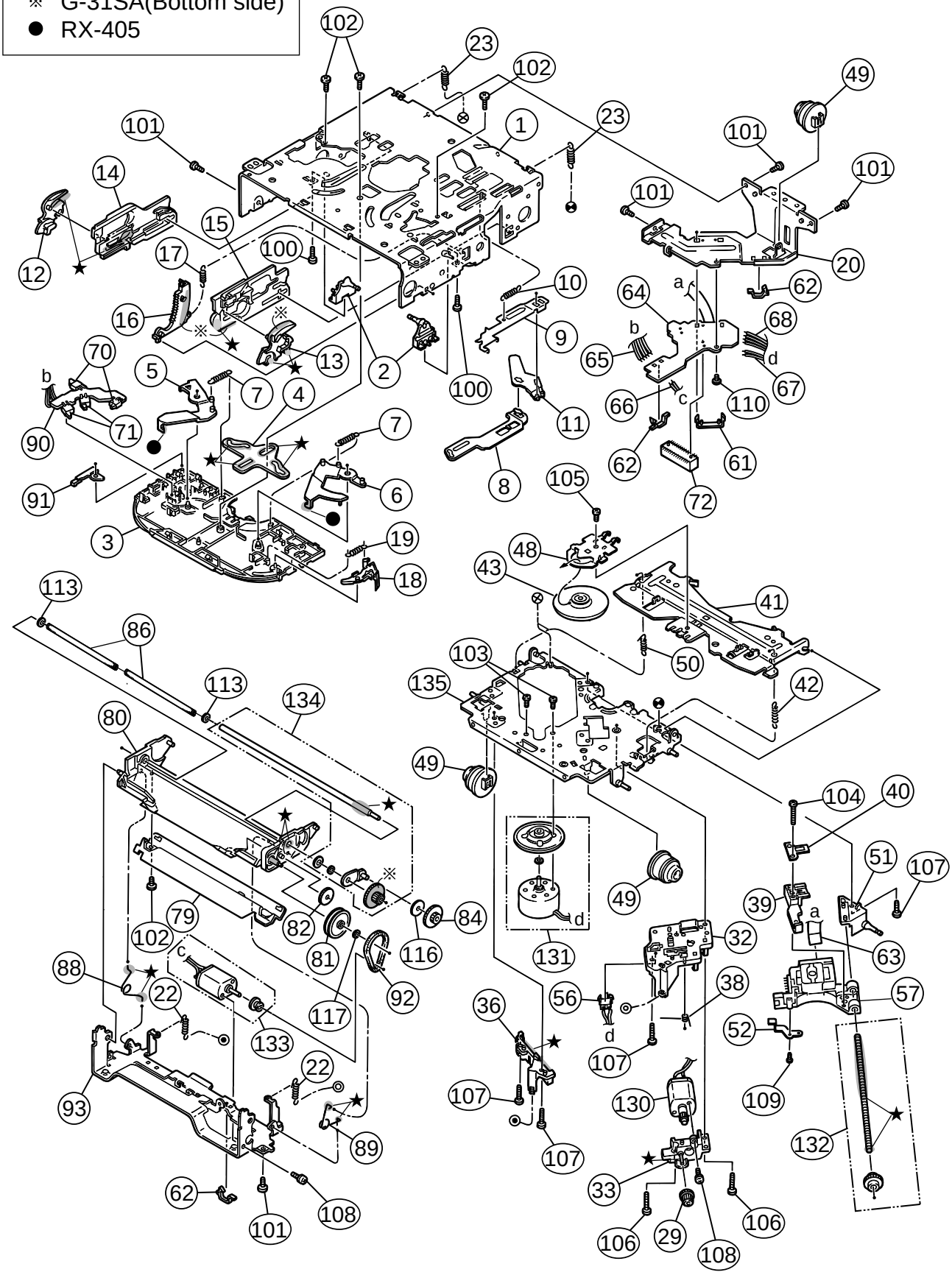

■ Parts list (CD mechanism)

Block No. M2MM

⚠	Item	Parts number	Parts name	Q'ty	Description	Area
	1	30310101T	FRAME	1		
	2	30310103T	DANPER PIN	2		
	3	30310107T	UPPER PLATE	1		
	4	30310108T	SEL STOP PLATE	1		
	5	30310142T	SEL ARM (L)L	1		
	6	30310143T	SEL ARM (R)L	1		
	7	30310145T	S ARM SPRING(L)	2		
	8	30310112T	TRIG LEVER	1		
	9	30310155T	TRIG PL(Z)	1		
	10	30310115T	TRIG PL SPRING	1		
	11	30310116T	TRIG ARM	1		
	12	30310134T	FIX ARM (L)B	1		
	13	30310159T	FIX ARM (R)Z	1		
	14	30310150T	FIX PL (L)Z	1		
	15	30310156T	FIX PL (R) Z	1		
	16	30310138T	LDG GR (6)B	1		
	17	30310122T	LDG GEAR (6)SP	1		
	18	30310148T	S.L ARM(N)	1		
	19	30310125T	S.L ARM SPRING	1		
	20	30310149T	REAR DAM BKT(Z)	1		
	22	30310151T	HUNG UP SP (FZ)	2		
	23	30310129T	HUNG UP SP (R)	2		
	29	30300510T	PU GEAR(B)	1		
	32	30310544T	F.M.BASE(Z)	1		
	33	30310547T	FD GR BLK(Z)	1		
	36	30310546T	PU GUIDE(Z)	1		
	38	30310533T	THRUST SPR(M)	1		
	39	30310548T	PU M NUT(Z)	1		
	40	30310512T	NUT PUSH SPR PL	1		
	41	30310558T	CLP ARM(Z)	1		
	42	30310514T	CLP ARM SPRING	1		
	43	30310552T	CLAMPER(Z)	1		
	48	30310557T	CLAMPER PLATE(Z	1		
	49	30310524T	DAMPER (J)	3		
	50	30310525T	CLP ARM SPR (L)	1		
	51	30310545T	F SCREW GUIDE(Z	1		
	52	30310556T	PU G.SP PLT(Z)	1		
	56	64180405T	DET SW	1	ESE11SF4	
	57	OPTIMA-720L1	C.D PICK (CAR)	1		
	61	30311035T	FPC HOLDER(Z)	1		
	62	19501403T	WIRE CLAMPER	3		
	63	30311037T	PICK UP FPC(Z)	1		
	64	30311036T	CONNECT.PCB(Z-J	1		
	65	30311038T	WIRE (5P-Z)	1		
	66	30311039T	WIRE (LD-Z)	1		
	67	30311040T	WIRE (FD-Z)	1		
	68	30311041T	WIRE (RS-Z)	1		
	70	64180402T	DET SWITCH	2	ESE22MH1	

■ Parts list (CD mechanism)

Block No. M2MM

⚠	Item	Parts number	Parts name	Q'ty	Description	Area
	71	64180403T	DET SWITCH	2	ESE22MH3	
	72	68150232T	CONNECTOR	1	TKC-W26X-C1	
	79	30311105T	SOPPORT PLATE	1		
	80	30311138T	GR MT BLK(N)	1		
	81	30311109T	LDG GEAR (2)	1		
	82	30311110T	LDG GEAR (3)	1		
	84	30311112T	LDG GEAR (5)	1		
	86	30311136T	LDG ROLLER	2		
	88	30311118T	L.P SPRING (L)	1		
	89	30311119T	L.P SPRING (R)	1		
	90	30311123T	SW PCB	1		
	91	30311124T	SW ACTUATOR	1		
	92	30311129T	LDG BELT	1		
	93	30311140T	FRONT BRKT (J)	1		
	100	9C0620503T	C B TAP SCREW	2	M2X5	
	101	9C2020401T	C SCREW TS.G	5	M2X4	
	102	9C4320403T	C B TAP SCREW	4	M2X4	
	103	9C0117223T	SCREW	2	M1.7X2.2	
	104	9C0917703T	C TAP SCREW S3	1	M1.7X7	
	105	9C0320201T	C TAP SCREW S3	1	M2X2	
	106	9C4920013T	C TAP SCREW S3	2	M2X10	
	107	9C4920603T	C TAP SCREW B3	4	M2X6	
	108	9P0220031T	TAMS SCREW	2	M2X3	
	109	9C0314203T	C TAP SCREW	1	M1.4X2	
	110	9C0420253	C TAP SCREW	1	M2X2.5	
	113	9W0330276	NW BLUE	2	2.9X5X0.3	
	116	9W0725030T	LUMILAR W	1	2.3X9.8X0.25	
	117	9W0640030T	WASHER	1	1.4X3.2X0.4	
	130	303105310T	FEED MO ASSY	1		
	131	303105311T	SPINDLE MO ASSY	1		
	132	303105312T	FEED SCREW ASSY	1		
	133	303111301T	LDG MOTOR ASSY	1		
	134	303111302T	RDG RLR SFT ASY	1		
	135	303105502T	T.T.BASE ASSY	1		

■ Electrical parts list (Main board)

Block No. 01

⚠	Item	Parts number	Parts name	Remarks	Area
	C 1	NDC21HJ-5R0X	C CAPACITOR		
	C 2	NDC21HJ-100X	C CAPACITOR		
	C 3	QERF1HM-104Z	E CAPACITOR	.10MF 20% 50V	
	C 4	NCS21HJ-221X	C CAPACITOR		
	C 5	QERF1HM-474Z	E CAPACITOR	.47MF 20% 50V	
	C 6	NCB21EK-473X	C CAPACITOR		
	C 7	NCS21HJ-101X	C CAPACITOR		
	C 9	QERF1AM-227Z	E CAPACITOR	220MF 20% 10V	
	C 10	NCB21HK-102X	C CAPACITOR		
	C 31	QERF1HM-225Z	E CAPACITOR	2.2MF 20% 50V	
	C 32	NCB21HK-102X	C CAPACITOR		
	C 41	NCB21HK-333X	C CAPACITOR		
	C 42	NCB21HK-822X	C CAPACITOR		
	C 43	QERF1CM-107Z	E CAPACITOR	100MF 20% 16V	
	C 44	NCB21HK-103X	C CAPACITOR		
	C 51	QERF1HM-474Z	E CAPACITOR	.47MF 20% 50V	
	C 52	NCB21HK-472X	C CAPACITOR		
	C 53	NCB21EK-104X	C CAPACITOR		
	C 54	NCB21HK-103X	C CAPACITOR		
	C 55	NCB21HK-331X	C CAPACITOR		
	C 71	NDC21HJ-820X	C CAPACITOR		
	C 72	NDC21HJ-470X	C CAPACITOR		
	C 73	NCB21HK-103X	C CAPACITOR		
	C 74	QERF1AM-476Z	E CAPACITOR	47MF 20% 10V	
	C 75	NCS21HJ-561X	C CAPACITOR		
	C 76	QEKJ1HM-225Z	E CAPACITOR	2.2MF 20% 50V	
	C 77	NCB21EK-223X	C CAPACITOR		
	C 161	QEKJ1HM-105Z	E CAPACITOR	1.0MF 20% 50V	
	C 162	NCB21HK-822X	C CAPACITOR		
	C 163	NCB21CK-154X	C CAPACITOR		
	C 164	QEKJ1HM-224Z	E CAPACITOR	.22MF 20% 50V	
	C 165	NCB21HK-333X	C CAPACITOR		
	C 166	NCB21HK-562X	C CAPACITOR		
	C 167	QEKJ1HM-225Z	E CAPACITOR	2.2MF 20% 50V	
	C 168	QEKJ1HM-225Z	E CAPACITOR	2.2MF 20% 50V	
	C 169	QERF1HM-105Z	E CAPACITOR	1.0MF 20% 50V	
	C 171	QERF1HM-105Z	E CAPACITOR	1.0MF 20% 50V	
	C 172	NCB21HK-183X	C CAPACITOR		
	C 173	NCB21EK-104X	C CAPACITOR		
	C 181	QEKJ1HM-105Z	E CAPACITOR	1.0MF 20% 50V	
	C 182	NCB21HK-822X	C CAPACITOR		
	C 183	NCB21CK-154X	C CAPACITOR		
	C 184	QEKJ1HM-224Z	E CAPACITOR	.22MF 20% 50V	
	C 185	NCB21HK-333X	C CAPACITOR		
	C 186	NCB21HK-562X	C CAPACITOR		
	C 187	QERF1HM-225Z	E CAPACITOR	2.2MF 20% 50V	
	C 188	QERF1HM-225Z	E CAPACITOR	2.2MF 20% 50V	
	C 189	QEKJ1HM-105Z	E CAPACITOR	1.0MF 20% 50V	
	C 191	QERF1HM-105Z	E CAPACITOR	1.0MF 20% 50V	
	C 192	NCB21HK-183X	C CAPACITOR		
	C 309	QERF1CM-106Z	E CAPACITOR	10MF 20% 16V	
	C 310	QERF1CM-106Z	E CAPACITOR	10MF 20% 16V	
	C 312	NCB21EK-473X	C CAPACITOR		
	C 313	NCB21EK-104X	C CAPACITOR		
	C 314	NCB21EK-104X	C CAPACITOR		
	C 315	NCB21EK-104X	C CAPACITOR		
	C 322	NCS21HJ-391X	C CAPACITOR		
	C 332	NCS21HJ-391X	C CAPACITOR		
	C 342	NCS21HJ-391X	C CAPACITOR		
	C 352	NCS21HJ-391X	C CAPACITOR		
	C 501	QERF1AM-227Z	E CAPACITOR	220MF 20% 10V	
	C 502	NCB21HK-103X	C CAPACITOR		
	C 503	QEKJ1CM-226Z	E CAPACITOR	22MF 20% 16V	

⚠	Item	Parts number	Parts name	Remarks	Area
	C 521	NCB21HK-103X	C CAPACITOR		
	C 522	NCB21HK-103X	C CAPACITOR		
	C 523	NCB21EK-103X	C CAPACITOR		
	C 524	QEKJ1AM-107Z	E CAPACITOR	100MF 20% 10V	
	C 525	NCB21HK-103X	C CAPACITOR		
	C 526	QEKJ0JM-107Z	E CAPACITOR	100MF 20% 6.3V	
	C 527	QEKJ0JM-107Z	E CAPACITOR	100MF 20% 6.3V	
	C 528	NCS21HJ-101X	C CAPACITOR		
	C 529	NCB21HK-103X	C CAPACITOR		
	C 530	QEKJ0JM-107Z	E CAPACITOR	100MF 20% 6.3V	
	C 531	NCB21EK-104X	C CAPACITOR		
	C 532	NCB21EK-104X	C CAPACITOR		
	C 533	NCS21HJ-560X	C CAPACITOR		
	C 541	QEKJ0JM-107Z	E CAPACITOR	100MF 20% 6.3V	
	C 542	NCB21HK-103X	C CAPACITOR		
	C 543	QEKJ1HM-105Z	E CAPACITOR	1.0MF 20% 50V	
	C 544	QEKJ0JM-107Z	E CAPACITOR	100MF 20% 6.3V	
	C 545	NCB21HK-103X	C CAPACITOR		
	C 546	QEKJ0JM-107Z	E CAPACITOR	100MF 20% 6.3V	
	C 547	NDC21HJ-470X	C CAPACITOR		
	C 548	NCB21HK-153X	C CAPACITOR		
	C 549	QEKJ0JM-107Z	E CAPACITOR	100MF 20% 6.3V	
	C 550	NCB21HK-103X	C CAPACITOR		
	C 551	NCB21HK-272X	C CAPACITOR		
	C 552	NCB21HK-103X	C CAPACITOR		
	C 553	QEKJ0JM-107Z	E CAPACITOR	100MF 20% 6.3V	
	C 554	NCB21HK-103X	C CAPACITOR		
	C 555	NCB21EK-333X	C CAPACITOR		
	C 556	NCB21HK-332X	C CAPACITOR		
	C 557	NCS21HJ-561X	C CAPACITOR		
	C 558	QEKJ0JM-107Z	E CAPACITOR	100MF 20% 6.3V	
	C 559	NCB21HK-473X	C CAPACITOR		
	C 560	NCB21HK-473X	C CAPACITOR		
	C 561	NCB21HK-473X	C CAPACITOR		
	C 562	NCB21HK-473X	C CAPACITOR		
	C 563	QEKJ0JM-107Z	E CAPACITOR	100MF 20% 6.3V	
	C 564	NCB21HK-103X	C CAPACITOR		
	C 565	NCB21HK-103X	C CAPACITOR		
	C 566	NDC21HJ-100X	C CAPACITOR		
	C 567	NDC21HJ-100X	C CAPACITOR		
	C 568	NCB21HK-103X	C CAPACITOR		
	C 569	QEKJ0JM-107Z	E CAPACITOR	100MF 20% 6.3V	
	C 570	NCS21HJ-101X	C CAPACITOR		
	C 571	QEKJ0JM-107Z	E CAPACITOR	100MF 20% 6.3V	
	C 572	QEKJ0JM-107Z	E CAPACITOR	100MF 20% 6.3V	
	C 573	NCB21HK-103X	C CAPACITOR		
	C 581	NCS21HJ-821X	C CAPACITOR		
	C 582	QEKJ1EM-475Z	E CAPACITOR	4.7MF 20% 25V	
	C 583	QEKJ0JM-476Z	E CAPACITOR	47MF 20% 6.3V	
	C 584	NCS21HJ-121X	C CAPACITOR		
	C 591	NCS21HJ-821X	C CAPACITOR		
	C 592	QEKJ1EM-475Z	E CAPACITOR	4.7MF 20% 25V	
	C 593	QEKJ0JM-476Z	E CAPACITOR	47MF 20% 6.3V	
	C 594	NCS21HJ-121X	C CAPACITOR		
	C 595	QEKJ1AM-107Z	E CAPACITOR	100MF 20% 10V	
	C 701	NDC21HJ-220X	C CAPACITOR		
	C 702	NDC21HJ-220X	C CAPACITOR		
	C 703	NCB21EK-104X	C CAPACITOR		
	C 704	NCB21EK-104X	C CAPACITOR		
	C 706	QEKJ0JM-107Z	E CAPACITOR	100MF 20% 6.3V	
	C 707	NCB21HK-103X	C CAPACITOR		
	C 708	QERF0JM-107Z	E CAPACITOR	100MF 20% 6.3V	
	C 709	NCB21HK-103X	C CAPACITOR		

■ Electrical parts list (Main board)

Block No. 01

⚠	Item	Parts number	Parts name	Remarks	Area
	C 712	NDC21HJ-680X	C CAPACITOR		
	C 713	NCB21HK-103X	C CAPACITOR		
	C 718	NCB21HK-103X	C CAPACITOR		
	C 719	NCB21EK-104X	C CAPACITOR		
	C 720	NCB21EK-104X	C CAPACITOR		
	C 721	NCB21EK-104X	C CAPACITOR		
	C 781	QERF0JM-107Z	E CAPACITOR	100MF 20% 6.3V	
	C 782	QERF1CM-226Z	E CAPACITOR	22MF 20% 16V	
	C 783	NCB21EK-823X	C CAPACITOR		
	C 891	NCB21EK-473X	C CAPACITOR		
	C 901	QERF1AM-227Z	E CAPACITOR	220MF 20% 10V	
	C 902	NCB21HK-103X	C CAPACITOR		
	C 903	QEKJ1CM-226Z	E CAPACITOR	22MF 20% 16V	
	C 904	QERF1AM-227Z	E CAPACITOR	220MF 20% 10V	
	C 905	QERF1CM-106Z	E CAPACITOR	10MF 20% 16V	
	C 906	QERF1CM-106Z	E CAPACITOR	10MF 20% 16V	
	C 907	QERF1HM-225Z	E CAPACITOR	2.2MF 20% 50V	
	C 908	QEZ0338-228	E CAPACITOR	2200MF	
	C 909	NCB21EK-104X	C CAPACITOR		
	C 911	QERF1AM-476Z	E CAPACITOR	47MF 20% 10V	
	C 912	QEKJ1AM-107Z	E CAPACITOR	100MF 20% 10V	
	C 913	QEKJ1CM-107Z	E CAPACITOR	100MF 20% 16V	
	C 914	QERF1EM-475Z	E CAPACITOR	4.7MF 20% 25V	
	C 915	QERF1CM-106Z	E CAPACITOR	10MF 20% 16V	
	CN501	QGB2027M1-26S	CONNECTOR		
	CP601	VMC0334-001	CONNECTOR	F.PANEL CONN.	
	CP961	QNZ0112-001	CAR CONNECTOR		
	D 1	1SS133-T1	SI DIODE		
	D 2	1SS133-T1	SI DIODE		
	D 3	MA152WK-X	SI DIODE		
	D 161	MA152WK-X	SI DIODE		
	D 341	MA152WA-X	DIODE		
	D 501	DSK10C-T1	DIODE		
	D 781	MA152WK-X	SI DIODE		
	D 782	1SS133-T1	SI DIODE		
	D 784	MA3110/M/-X	ZENER DIODE		
	D 891	MA152WA-X	DIODE		
	D 909	MA152WA-X	DIODE		
	D 910	CRS03-W	SB DIODE		
	D 911	1N5401-TU-15	DIODE		
	D 912	CRS03-W	SB DIODE		
	IC 71	SAA6579T-X	IC		
	IC161	TEA6320T-X	IC		
	IC301	HA13158A	IC		
	IC501	LA6567H-X	IC		
	IC521	TA2109F-X	IC		
	IC541	TC9462F	IC		
	IC581	NJM4565M-WE	IC		
	IC701	UPD178078GF-525	IC		
	IC961	BA4905-V3	IC		
	J 1	QNZ0009-001	CAR ANT JACK		
	J 301	QNN0170-001	PIN JACK (REEL)		
	L 1	QQL244J-4R7Z	INDUCTOR		
	L 541	QQL244J-4R7Z	INDUCTOR		
	L 542	QQL244J-4R7Z	INDUCTOR		
	L 701	QQL244J-4R7Z	INDUCTOR		
	L 961	QQR0703-001	CHOKE COIL		
	Q 1	UN2211-X	TRANSISTOR		
	O 2	2SD601A/R/-X	TRANSISTOR		
	O 3	UN2111-X	TRANSISTOR		
	O 4	2SB709A/R/-X	TRANSISTOR		
	O 5	2SB815/7/-X	TRANSISTOR		
	O 7	UN2211-X	TRANSISTOR		

⚠	Item	Parts number	Parts name	Remarks	Area
	O 31	2SD601A/R/-X	TRANSISTOR		
	O 32	2SD601A/R/-X	TRANSISTOR		
	Q 41	2SD601A/R/-X	TRANSISTOR		
	O 42	2SC3661-X	TRANSISTOR		
	O 43	UN2211-X	TRANSISTOR		
	O 51	2SD601A/R/-X	TRANSISTOR		
	O 52	2SD601A/R/-X	TRANSISTOR		
	O 53	UN2211-X	TRANSISTOR		
	Q 161	2SD601A/R/-X	TRANSISTOR		
	O 162	UN2111-X	TRANSISTOR		
	O 174	UN2111-X	TRANSISTOR		
	Q 181	2SD601A/R/-X	TRANSISTOR		
	O 341	2SD1048/6-7/-X	TRANSISTOR		
	Q 351	2SD1048/6-7/-X	TRANSISTOR		
	O 501	2SB1322/RS/-T	TRANSISTOR		
	O 521	2SB1322/RS/-T	TRANSISTOR		
	O 781	UN2111-X	TRANSISTOR		
	O 782	UN2211-X	TRANSISTOR		
	Q 783	UN2111-X	TRANSISTOR		
	O 891	UN2211-X	TRANSISTOR		
	O 901	2SB709A/R/-X	TRANSISTOR		
	O 902	UN2213-X	TRANSISTOR		
	O 976	UN2211-X	TRANSISTOR		
	O 977	2SB709A/R/-X	TRANSISTOR		
	R 1	NRSA02J-0R0X	MG RESISTOR		
	R 2	NRSA02J-102X	MG RESISTOR		
	R 3	NRSA02J-102X	MG RESISTOR		
	R 4	NRSA02J-223X	MG RESISTOR		
	R 5	NRSA02J-472X	MG RESISTOR		
	R 6	NRSA02J-473X	MG RESISTOR		
	R 7	NRSA02J-472X	MG RESISTOR		
	R 8	NRSA02J-473X	MG RESISTOR		
	R 9	NRSA02J-332X	MG RESISTOR		
	R 10	NRS181J-8R2X	MG RESISTOR		
	R 31	NRSA02J-102X	MG RESISTOR		
	R 32	NRSA02J-103X	MG RESISTOR		
	R 33	NRSA02J-152X	MG RESISTOR		
	R 41	NRSA02J-332X	MG RESISTOR		
	R 42	NRSA02J-102X	MG RESISTOR		
	R 43	NRSA02J-102X	MG RESISTOR		
	R 44	NRS181J-330X	MG RESISTOR		
	R 51	NRSA02J-471X	MG RESISTOR		
	R 52	NRSA02J-153X	MG RESISTOR		
	R 53	NRSA02J-103X	MG RESISTOR		
	R 54	NRSA02J-103X	MG RESISTOR		
	R 55	NRSA02J-222X	MG RESISTOR		
	R 56	NRSA02J-473X	MG RESISTOR		
	R 57	NRSA02J-473X	MG RESISTOR		
	R 58	NRSA02J-473X	MG RESISTOR		
	R 71	NRSA02J-222X	MG RESISTOR		
	R 72	NRSA02J-222X	MG RESISTOR		
	R 73	NRSA02J-222X	MG RESISTOR		
	R 162	NRSA02J-223X	MG RESISTOR		
	R 163	NRSA02J-222X	MG RESISTOR		
	R 164	NRSA02J-332X	MG RESISTOR		
	R 165	NRSA02J-473X	MG RESISTOR		
	R 166	NRSA02J-473X	MG RESISTOR		
	R 167	NRSA02J-103X	MG RESISTOR		
	R 168	NRSA02J-223X	MG RESISTOR		
	R 169	NRSA02J-472X	MG RESISTOR		
	R 170	NRSA02J-472X	MG RESISTOR		
	R 182	NRSA02J-223X	MG RESISTOR		
	R 183	NRSA02J-222X	MG RESISTOR		

■ **Electrical parts list (Main board)** **Block No. 01**

⚠	Item	Parts number	Parts name	Remarks	Area
	R 184	NRSA02J-332X	MG RESISTOR		
	R 185	NRSA02J-473X	MG RESISTOR		
	R 186	NRSA02J-473X	MG RESISTOR		
	R 187	NRSA02J-103X	MG RESISTOR		
	R 188	NRSA02J-223X	MG RESISTOR		
	R 241	NRSA02J-274X	MG RESISTOR		
	R 310	NRSA02J-472X	MG RESISTOR		
	R 321	NRSA02J-273X	MG RESISTOR		
	R 331	NRSA02J-273X	MG RESISTOR		
	R 341	NRSA02J-273X	MG RESISTOR		
	R 342	NRSA02J-102X	MG RESISTOR		
	R 343	NRSA02J-222X	MG RESISTOR		
	R 344	NRSA02J-101X	MG RESISTOR		
	R 351	NRSA02J-273X	MG RESISTOR		
	R 352	NRSA02J-102X	MG RESISTOR		
	R 353	NRSA02J-222X	MG RESISTOR		
	R 354	NRSA02J-101X	MG RESISTOR		
	R 501	NRSA02J-822X	MG RESISTOR		
	R 502	NRSA02J-562X	MG RESISTOR		
	R 503	NRSA02J-242X	MG RESISTOR		
	R 504	NRSA02J-203X	MG RESISTOR		
	R 506	NRS181J-0R0X	MG RESISTOR		
	R 507	NRS181J-822X	MG RESISTOR		
	R 508	NRS181J-203X	MG REGISTOR		
	R 521	NRSA02J-473X	MG RESISTOR		
	R 522	NRSA02J-473X	MG RESISTOR		
	R 523	NRSA02J-473X	MG RESISTOR		
	R 524	NRSA02J-473X	MG RESISTOR		
	R 525	NRSA02J-104X	MG RESISTOR		
	R 526	NRSA02J-104X	MG RESISTOR		
	R 527	NRSA02J-220X	MG RESISTOR		
	R 528	NRSA02J-220X	MG RESISTOR		
	R 529	NRSA02J-273X	MG RESISTOR		
	R 530	NRSA02J-473X	MG RESISTOR		
	R 531	NRSA02J-222X	MG RESISTOR		
	R 532	NRSA02J-153X	MG RESISTOR		
	R 533	NRSA02J-682X	MG RESISTOR		
	R 534	NRSA02J-473X	MG RESISTOR		
	R 541	NRSA02J-472X	MG RESISTOR		
	R 542	NRSA02J-472X	MG RESISTOR		
	R 543	NRSA02J-472X	MG RESISTOR		
	R 544	NRSA02J-472X	MG RESISTOR		
	R 545	NRSA02J-103X	MG RESISTOR		
	R 546	NRSA02J-103X	MG RESISTOR		
	R 547	NRSA02J-473X	MG RESISTOR		
	R 548	NRSA02J-683X	MG RESISTOR		
	R 549	NRSA02J-474X	MG RESISTOR		
	R 550	NRSA02J-333X	MG RESISTOR		
	R 551	NRSA02J-103X	MG RESISTOR		
	R 552	NRSA02J-152X	MG RESISTOR		
	R 553	NRSA02J-153X	MG RESISTOR		
	R 554	NRSA02J-332X	MG RESISTOR		
	R 555	NRSA02J-332X	MG RESISTOR		
	R 556	NRSA02J-682X	MG RESISTOR		
	R 557	NRSA02J-152X	MG RESISTOR		
	R 558	NRS181J-101X	MG RESISTOR		
	R 581	NRSA02J-243X	MG RESISTOR		
	R 582	NRSA02J-223X	MG RESISTOR		
	R 583	NRSA02J-223X	MG RESISTOR		
	R 584	NRSA02J-333X	MG RESISTOR		
	R 585	NRSA02J-123X	MG RESISTOR		
	R 586	NRSA02J-152X	MG RESISTOR		
	R 591	NRSA02J-243X	MG RESISTOR		

⚠	Item	Parts number	Parts name	Remarks	Area
	R 592	NRSA02J-223X	MG RESISTOR		
	R 593	NRSA02J-223X	MG RESISTOR		
	R 594	NRSA02J-333X	MG RESISTOR		
	R 595	NRSA02J-123X	MG RESISTOR		
	R 596	NRSA02J-152X	MG RESISTOR		
	R 701	NRSA02J-102X	MG RESISTOR		
	R 702	NRSA02J-122X	MG RESISTOR		
	R 703	NRSA02J-222X	MG RESISTOR		
	R 704	NRSA02J-222X	MG RESISTOR		
	R 705	NRSA02J-222X	MG RESISTOR		
	R 706	NRSA02J-103X	MG RESISTOR		
	R 707	NRSA02J-473X	MG RESISTOR		
	R 708	NRSA02J-473X	MG RESISTOR		
	R 709	NRSA02J-472X	MG RESISTOR		
	R 710	NRSA02J-472X	MG RESISTOR		
	R 711	NRSA02J-472X	MG RESISTOR		
	R 712	NRSA02J-472X	MG RESISTOR		
	R 713	NRSA02J-103X	MG RESISTOR		
	R 714	NRSA02J-103X	MG RESISTOR		
	R 715	NRSA02J-103X	MG RESISTOR		
	R 716	NRSA02J-103X	MG RESISTOR		
	R 717	NRSA02J-103X	MG RESISTOR		
	R 718	NRSA02J-103X	MG RESISTOR		
	R 719	NRSA02J-472X	MG RESISTOR		
	R 720	NRSA02J-472X	MG RESISTOR		
	R 721	NRSA02J-472X	MG RESISTOR		
	R 722	NRSA02J-0R0X	MG RESISTOR		
	R 723	NRSA02J-104X	MG RESISTOR		
	R 725	NRSA02J-104X	MG RESISTOR		
	R 726	NRSA02J-473X	MG RESISTOR		
	R 727	NRSA02J-473X	MG RESISTOR		
	R 728	NRSA02J-473X	MG RESISTOR		
	R 729	NRSA02J-473X	MG RESISTOR		
	R 730	NRSA02J-104X	MG RESISTOR		
	R 731	NRSA02J-104X	MG RESISTOR		
	R 732	NRSA02J-473X	MG RESISTOR		
	R 733	NRSA02J-473X	MG RESISTOR		
	R 734	NRSA02J-103X	MG RESISTOR		
	R 736	NRSA02J-103X	MG RESISTOR		
	R 737	NRSA02J-473X	MG RESISTOR		
	R 738	NRSA02J-103X	MG RESISTOR		
	R 739	NRSA02J-473X	MG RESISTOR		
	R 740	NRSA02J-103X	MG RESISTOR		
	R 743	NRSA02J-473X	MG RESISTOR		
	R 744	NRSA02J-222X	MG RESISTOR		
	R 745	NRSA02J-222X	MG RESISTOR		
	R 746	NRSA02J-473X	MG RESISTOR		
	R 750	NRSA02J-473X	MG RESISTOR		
	R 781	NRS181J-273X	MG RESISTOR		
	R 782	NRS181J-102X	MG RESISTOR		
	R 801	NRSA02J-104X	MG RESISTOR		
	R 802	NRSA02J-104X	MG RESISTOR		
	R 803	NRSA02J-104X	MG RESISTOR		
	R 807	NRSA02J-104X	MG RESISTOR		
	R 809	NRSA02J-104X	MG RESISTOR		
	R 891	NRSA02J-473X	MG RESISTOR		
	R 892	NRSA02J-102X	MG RESISTOR		
	R 901	NRSA02J-222X	MG RESISTOR		
	R 902	NRSA02J-473X	MG RESISTOR		
	R 903	NRSA02J-0R0X	MG RESISTOR		
	R 905	NRSA02J-472X	MG RESISTOR		
	R 906	NRSA02J-103X	MG RESISTOR		
	R 907	QRZ0125-470X	C RESISTOR	47 1/1W	

■ **Electrical parts list (Main board)** **Block No. 01**

⚠	Item	Parts number	Parts name	Remarks	Area
	R 911	NRSA02J-100X	MG RESISTOR		
	R 976	NRSA02J-473X	MG RESISTOR		
	R 977	NRSA02J-273X	MG RESISTOR		
	R 978	NRSA02J-123X	MG RESISTOR		
	TU 1	QAU0156-002	TUNER		
	X 71	QAX0263-001Z	CRYSTAL		
	X 541	QAX0413-001Z	CRYSTAL		
	X 701	QAX0406-002Z	CRYSTAL		

■ Electrical parts list (Front board)

Block No. 02

⚠	Item	Parts number	Parts name	Remarks	Area
	C 601	NCB21HK-223X	C CAPACITOR		
	C 602	NCS21HJ-681X	C CAPACITOR		
	C 603	NBE20JM-106X	TS E CAP SVB20J		
	CJ601	VMC0335-001	CONNECTOR		
	D 601	SML-310DT/KL/-X	LED		
	D 602	SML-310DT/KL/-X	LED		
	D 603	SML-310DT/KL/-X	LED		
	D 604	SML-310DT/KL/-X	LED		
	D 605	SML-310DT/KL/-X	LED		
	D 606	SML-310DT/KL/-X	LED		
	D 607	SML-310DT/KL/-X	LED		
	D 608	SML-310DT/KL/-X	LED		
	D 609	SML-310DT/KL/-X	LED		
	D 610	SML-310DT/KL/-X	LED		
	D 611	SML-310DT/KL/-X	LED		
	D 612	SML-310DT/KL/-X	LED		
	D 613	SML-310DT/KL/-X	LED		
	D 614	SML-310DT/KL/-X	LED		
	D 615	SML-310DT/KL/-X	LED		
	D 616	SML-310DT/KL/-X	LED		
	D 617	SML-310DT/KL/-X	LED		
	D 618	SML-310DT/KL/-X	LED		
	D 619	SML-310DT/KL/-X	LED		
	D 620	SML-310DT/KL/-X	LED		
	D 621	SML-310LT/MN/-X	LED	POWER LED	
	D 641	MA3047/M/-X	ZENER DIODE		
	D 642	MA152WK-X	SI DIODE		
	IC601	LC75823W	IC		
	PL601	QLL0075-001	PILOT LAMP		
	PL602	QLL0075-001	PILOT LAMP		
	R 601	NRSA02J-821X	MG RESISTOR		
	R 602	NRSA02J-821X	MG RESISTOR		
	R 603	NRSA02J-122X	MG RESISTOR		
	R 604	NRSA02J-182X	MG RESISTOR		
	R 605	NRSA02J-272X	MG RESISTOR		
	R 606	NRSA02J-821X	MG RESISTOR		
	R 607	NRSA02J-821X	MG RESISTOR		
	R 608	NRSA02J-122X	MG RESISTOR		
	R 609	NRSA02J-182X	MG RESISTOR		
	R 610	NRSA02J-272X	MG RESISTOR		
	R 611	NRSA02J-392X	MG RESISTOR		
	R 612	NRSA02J-103X	MG RESISTOR		
	R 613	NRSA02J-821X	MG RESISTOR		
	R 614	NRSA02J-821X	MG RESISTOR		
	R 615	NRSA02J-122X	MG RESISTOR		
	R 616	NRSA02J-182X	MG RESISTOR		
	R 617	NRSA02J-272X	MG RESISTOR		
	R 618	NRSA02J-392X	MG RESISTOR		
	R 631	NRSA02J-821X	MG RESISTOR		
	R 632	NRSA02J-271X	MG RESISTOR		
	R 633	NRSA02J-271X	MG RESISTOR		
	R 634	NRSA02J-271X	MG RESISTOR		
	R 635	NRSA02J-271X	MG RESISTOR		
	R 636	NRSA02J-271X	MG RESISTOR		
	R 637	NRSA02J-271X	MG RESISTOR		
	R 638	NRSA02J-271X	MG RESISTOR		
	R 639	NRSA02J-271X	MG RESISTOR		
	R 640	NRSA02J-271X	MG RESISTOR		
	R 641	NRSA02J-271X	MG RESISTOR		
	R 651	NRSA02J-222X	MG RESISTOR		
	R 652	NRSA02J-222X	MG RESISTOR		
	R 653	NRSA02J-103X	MG RESISTOR		
	R 654	NRSA02J-103X	MG RESISTOR		

⚠	Item	Parts number	Parts name	Remarks	Area
	R 655	NRSA02J-103X	MG RESISTOR		
	R 656	NRSA02J-103X	MG RESISTOR		
	R 657	NRSA02J-513X	MG RESISTOR		
	R 658	NRSA02J-184X	MG RESISTOR		
	S 601	NSW0124-001X	TACT SWITCH	POWER	
	S 602	NSW0124-001X	TACT SWITCH	VOL UP	
	S 603	NSW0124-001X	TACT SWITCH	VOL DOWN	
	S 604	NSW0124-001X	TACT SWITCH	LOUD	
	S 605	NSW0124-001X	TACT SWITCH	MO	
	S 606	NSW0124-001X	TACT SWITCH	DOWN	
	S 607	NSW0124-001X	TACT SWITCH	SELECT	
	S 608	NSW0124-001X	TACT SWITCH	UP	
	S 609	NSW0124-001X	TACT SWITCH	1	
	S 610	NSW0124-001X	TACT SWITCH	2	
	S 611	NSW0124-001X	TACT SWITCH	3	
	S 612	NSW0124-001X	TACT SWITCH	4	
	S 613	NSW0124-001X	TACT SWITCH	5	
	S 614	NSW0124-001X	TACT SWITCH	EJECT	
	S 615	NSW0124-001X	TACT SWITCH	6	
	S 616	NSW0124-001X	TACT SWITCH	DISPLAY	
	S 617	NSW0124-001X	TACT SWITCH	SCAN	
	S 618	NSW0124-001X	TACT SWITCH	SOUND	
	S 619	NSW0124-001X	TACT SWITCH	AM	
	S 620	NSW0124-001X	TACT SWITCH	FM	
	S 621	NSW0124-001X	TACT SWITCH	CD	

Packing materials and accessories parts list

Block No. M 3 M M

Block No. M 4 M M

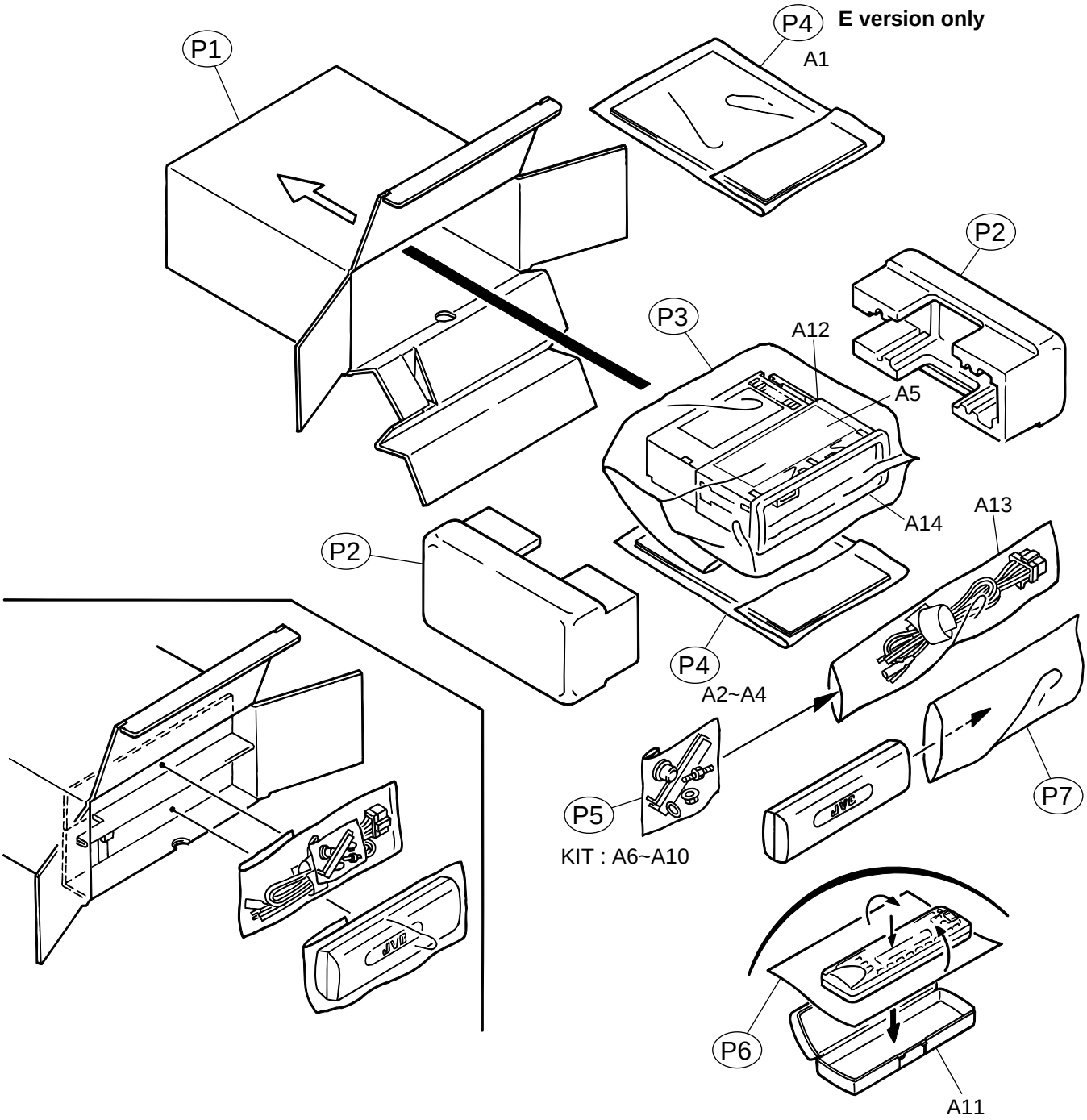

■ Parts list (Packing)

Block No. M3MM

⚠	Item	Parts number	Parts name	Q'ty	Description	Area
	P 1	GE30123-040A	PACKING CASE	1		
	P 2	GE10008-001A	CUSHION	2		
	P 3	QPC03004315P	POLY BAG	1	SET	
	P 4	FSPG4002-001	POLY BAG	1	INST.BOOK	EX
		FSPG4002-001	POLY BAG	2	INST.BOOK	E
	P 5	QPA00801205	POLY BAG	1	SCREW	
	P 6	FSYH4036-068	SHEET	1		
	P 7	QPA01003003	POLY BAG	1		

■ Parts list (Accessories)

Block No. M4MM

⚠	Item	Parts number	Parts name	Q'ty	Description	Area
	A 1	GET0042-002A	INST BOOK	1	FIN,ITA,SPA,SWE	E
	A 2	GET0042-001A	INST BOOK	1	ENG,FRE,GER,DUT	
	A 3	GET0042-003A	INSTALL MANUAL	1	ENG,GER,FRE	
		GET0042-004A	INSTALL MANUAL	1	DUT,SPA,ITA	
		GET0042-005A	INSTALL MANUAL	1	SWE,FIN	E
	A 4	BT-54013-1	WARRANTY CARD	1		
	A 5	LV40978-001A	CAUTION SHEET	1		
	A 6	VKZ4027-202	PLUG NUT	1		
	A 7	VKH4871-001SS	MOUNT BOLT	1		
	A 8	VKZ4328-001	LOCK NUT	1	FOR M5	
	A 9	WNS5000Z	WASHER	1		
	A 10	FSKL4010-002	HOOK	2		
	A 11	FSJB3001-30C	HARD CASE	1		
	A 12	FSKM2004-202	MOUNTING SLEEVE	1		
	A 13	QAM0175-001	POWER CORD	1		
	A 14	FSJD2034-001	TRIM PLATE	1		
	KIT	KDGS717K-SCREW1	SCREW PARTS KIT	1	A6-A10	